BJC-8200
BJC-8200 *Photo*
SERVICE MANUAL

REVISION 0

Canon

NOV. 1999 **QY8-1369-000**

COPYRIGHT © 1999 CANON INC. CANON BJC-8200 1199 SE 0.28-0 PRINTED IN JAPAN (IMPRIME AU JAPON)

1199 SE 0.28-0

BJC-8200
BJC-8200 *Photo*
SERVICE MANUAL

Canon

Target Readers

This manual is published by Canon Inc. for qualified persons and contains the necessary technical information for technical theory, installation, maintenance, and repair of products. This manual covers all localities where the products are sold. For this reason, it may contain information that does not apply to your locality.

Revisions

This manual may include technical inaccuracies or typographical errors due to improvements or changes in the products. When amendments are made to the content of this manual, Canon will issue technical information as the need arises. In the event of major alterations to the content of this manual over a long or short period, Canon will publish a revised version of the manual.

The following paragraphs do not apply to any countries where such provisions are inconsistent with local law.

Trademarks

The product names and company names appearing in this manual are the registered trademarks or trademarks of the individual companies.

Copyright

This manual is copyrighted and all rights reserved. Under the copyright laws, this manual may not be copied, reproduced, or translated into other languages, in whole or in part, without the express written consent of Canon Inc. except in the case of internal business use.

Copyright © 1999 by Canon Inc.

CANON INC.
BJ Products Quality Support Dept.
16-1, Shimonoge 3-chome, Takatsu-ku, Kawasaki-shi, Kanagawa 213, Japan

This manual was produced on an Apple Macintosh™ Power Mac 9600/233 personal computer and Apple LaserWriter™ II NTX-J laser beam printer; final pages were printed on Varityper™ 5300 with 4000-J RIP.
A Canon mo-5001S Magneto-Optical Storage Subsystem with mo-502M Magneto-Optical Storage Disk Cartridge and mo-IF2 interface kit were used for storing large volumes of page layout and graphic data for this manual.
All graphics were produced with MACROMEDIA FREEHAND™ 7.0J.
All documents and all page layouts were created with QuarkXPress™ 3.3J.

I. ABOUT THIS MANUAL

This manual is divided into five parts containing the information required for servicing the BJC-8200 printer.

Part 1: PRODUCT SPECIFICATIONS

This part outlines the product and its specifications.

Part 2: MAINTENANCE

This part explains maintenance of the unit. It includes precautions and details for disassembly and assembly, and adjustments required when assembling.

Part 3: OPERATION

This part explains how to operate the unit properly, and how to use the service mode.

Part 4: TROUBLESHOOTING

This part explains how to resolve problems of the unit, and contains information on how to locate and replace serviceable units and parts. It is divided into two sections: "Troubleshooting by Errors" and "Troubleshooting by Symptoms."

Part 5: REFERENCE

This part outlines the unit operation giving technical information on hardware, and contains block diagrams, pin assignments, and wiring/circuit diagrams.

This manual does not contain complete information required for disassembling and assembling the BJC-8200 printer. Please also refer to the separate Parts Catalog.

II. TABLE OF CONTENTS

Page

Part 1: PRODUCT SPECIFICATIONS

1 - 1 1. PRODUCT OUTLINE
1 - 1 1.1 Product Outline
1 - 2 1.2 Features
1 - 3 2. SPECIFICATIONS
1 - 3 2.1 Main Unit Specifications
1 - 3 2.1.1 Main unit specifications
1 - 3 2.1.2 Product life
1 - 4 2.2 Paper Specifications
1 - 4 2.2.1 Paper sizes
1 - 4 2.2.2 Paper measurement
1 - 4 2.2.3 Printable area
1 - 4 2.3 BJ Cartridge
1 - 6 2.4 Interface Specifications
1 - 6 2.4.1 Parallel interface
1 - 6 2.4.2 Serial (USB) interface
1 - 7 2.5 Printer Driver
1 - 7 2.6 Scanner Cartridge IS-52 (Optional)
1 - 8 3. NAMES OF PARTS AND THEIR FUNCTIONS
1 - 8 3.1 Names of Parts and Their Functions

Part 2: MAINTENANCE

2 - 1 1. PERIODICAL REPLACEMENT/MAINTENANCE
2 - 1 1.1 Parts for Periodic Replacement
2 - 1 1.2 List of Periodic Maintenance
2 - 2 2. DISASSEMBLY AND REASSEMBLY
2 - 2 2.1 List of Tools
2 - 3 2.2 Operation Precautions
2 - 3 2.2.1 Ink paths
2 - 4 2.2.2 Ink mist
2 - 4 2.2.3 Precautions for damage due to static electricity
2 - 5 2.2.4 Precautions for transporting the printer
2 - 5 2.2.5 Precautions on spur tip deformation
2 - 6 2.3 Precautions for Disassembling and Reassembling the Printer
2 - 6 2.3.1 Unlocking the carriage
2 - 6 2.3.2 Removing/installing self tap screws
2 - 7 2.3.3 Adjustable bushings supporting the carriage shaft
2 - 7 2.3.4 Feed gear
2 - 8 2.4 Grease Application
2 - 9 2.5 Adjustment/Setting Procedures
2 - 9 2.5.1 Adjustments (Timing, adjustment, time, tool)
2 - 9 2.5.2 Cleaning the pick-up roller
2 -10 2.5.3 Print head position adjustment
2 -11 2.5.4 Setting the EEPROM
2 -12 3. OPERATION CHECK AFTER DISASSEMBLING/REASSEMBLING
2 -12 3.1 Confirmation Methods
2 -13 4. TRANSPORTING THE PRINTER
2 -13 4.1 Transporting the Printer

Part 3: OPERATION

3 - 1 1. FUNCTIONS RELATED TO PRINTER OPERATION
3 - 1 1.1 Error Display
3 - 3 1.2 Descriptions of Error Indications

Page
3 - 4 1.3 BJ Status Monitor
3 - 4 1.3.1 Main functions of the BJ status monitor
3 - 4 1.3.2 Items displayed on the BJ status monitor
3 - 5 1.4 Function Settings
3 - 5 1.4.1 Function settings using the printer driver
3 - 6 1.5 Off-line Operation
3 - 6 1.5.1 Cleaning operation
3 - 6 1.5.2 Nozzle check pattern printing
3 - 7 1.5.3 Replacing the cartridge/ink tank
3 - 8 2. SERVICE MODE
3 - 8 2.1 Service Mode Operations
3 - 9 2.2 Service Test Print
3 -10 2.3 Printing EEPROM Information
3 -11 2.4 Resetting the EEPROM
3 -11 2.5 Setting the Waste Ink Counter
3 -12 2.6 Setting the Model
3 -12 2.7 Adjusting the Head Position
3 -13 2.8 Roller Cleaning

Part 4: TROUBLESHOOTING

4 - 1 1. TROUBLESHOOTING BY DISPLAYED ERRORS
4 - 1 1.1 Initial Flowchart
4 - 4 1.2 Error List (Indicator/Beeper/Error Code)
4 - 5 1.3 Troubleshooting by Errors
4 -14 2. TROUBLESHOOTING BY SYMPTOMS
4 -14 2.1 Troubleshooting by Symptoms

Part 5: REFERENCE

5 - 1 1. TECHNICAL REFERENCE
5 - 1 1.1 Functions of the Paper Feed Unit
5 - 2 1.2 Carriage Function
5 - 3 1.3 Purge Unit Functions
5 - 4 1.4 BJ Cartridge
5 - 5 1.5 Detection With Sensors
5 - 6 2. CONNECTOR POSITIONS AND PIN ASSIGNMENT
5 - 6 2.1 Logic Board
5 -10 2.2 Carriage Board
5 -13 2.3 BJ Cartridge
5 -14 2.4 Scanner Cartridge
5 -15 2.5 AC Adapter
5 -15 2.6 DC Power Cable
5 -16 2.7 Carriage Motor
5 -16 2.8 Paper Feed Motor
5 -16 2.9 Purge Motor
5 -17 2.10 Ink Sensor
5 -17 2.11 Paper Thickness Sensor
5 -17 2.12 Purge Sensor
5 -18 3. CIRCUIT DIAGRAM
5 -18 3.1 Parts Layout
5 -18 3.1.1 Logic board
5 -20 3.1.2 Carriage board
5 -21 3.2 Circuit Diagrams

III. ILLUSTRATION INDEX

Page

Part 1: PRODUCT SPECIFICATIONS

1 - 1 Figure 1- 1 Printer Appearance
1 - 5 Figure 1- 2 Printable Area
1 - 8 Figure 1- 3 Names of Parts and Their Functions

Part 2: MAINTENANCE

2 - 3 Figure 2- 1 Ink Paths
2- 4 Figure 2- 2 Ink Mist
2 - 5 Figure 2- 3 Capping Position
2 - 5 Figure 2- 4 Spur Unit
2 - 6 Figure 2- 5 Unlocking the Carriage
2 - 7 Figure 2- 6 Adjustable Bushings Supporting the Carriage Shaft
2 - 7 Figure 2- 7 Precautions on Feed Gears
2 - 8 Figure 2- 8 Grease Points
2 -10 Figure 2- 9 Print Position Adjustment Pattern

Part 3: OPERATIONS

3 - 1 Figure 3- 1 Operation Panel
3 - 4 Figure 3- 2 BJ Status Monitor (Sample)
3 - 5 Figure 3- 3 Printer Driver Utility (Sample)
3 - 7 Figure 3- 4 Nozzle Check Pattern Print
3 - 9 Figure 3- 5 Service Test Print (Sample)
3 -10 Figure 3- 6 EEPROM Information Print (Sample)
3 -11 Figure 3- 7 A Guide to Determine the Amount of Waste Ink Absorbed (Sample)
3 -13 Figure 3- 8 Head Position Adjustment Pattern (Sample)

Part 5: REFERENCE

5 - 1 Figure 5- 1 Paper Feed Path
5 - 2 Figure 5- 2 Carriage Unit
5 - 3 Figure 5- 3 Purge Unit
5 - 4 Figure 5- 4 BJ Cartridge
5 - 5 Figure 5- 5 Sensor Position
5 - 6 Figure 5- 6 Logic Board
5 - 6 Figure 5- 7 Block Diagram
5 -10 Figure 5- 8 Carriage Board
5 -13 Figure 5- 9 BJ Cartridge
5 -14 Figure 5- 10 Scanner Cartridge
5 -15 Figure 5- 11 AC Adapter
5 -15 Figure 5- 12 DC Power Cable
5 -16 Figure 5- 13 Carriage Motor
5 -16 Figure 5- 14 Paper Feed Motor
5 -16 Figure 5- 15 Purge Motor
5 -17 Figure 5- 16 Ink Sensor
5 -17 Figure 5- 17 Paper Thickness Sensor
5 -17 Figure 5- 18 Purge Sensor
5 -18 Figure 5- 19 Logic Board (Top View)
5 -19 Figure 5- 20 Logic Board (Bottom View)
5 -20 Figure 5- 21 Carriage Board

IV. TABLE INDEX

Page

Part 3: OPERATION

3 - 2 TABLE 3- 1 ERROR DISPLAY

Part 4: TROUBLESHOOTING

4 - 4 TABLE 4- 1 ERROR DISPLAY

Part 5: APPENDIX

5 - 3 TABLE 5- 1 AMOUNTS OF INK USED DURING CLEANING (GUIDE)

This page intentionally left blank

Part 1

PRODUCT SPECIFICATIONS

Page

1 - 1 1. PRODUCT OUTLINE
1 - 1 1.1 Product Outline
1 - 2 1.2 Features
1 - 3 2. SPECIFICATIONS
1 - 3 2.1 Main Unit Specifications
1 - 4 2.2 Paper Specifications
1 - 4 2.3 BJ Cartridge
1 - 6 2.4 Interface Specifications
1 - 7 2.5 Printer Driver
1 - 7 2.6 Scanner Cartridge IS-52 (Optional)
1 - 8 3. NAMES OF PARTS AND THEIR FUNCTIONS
1 - 8 3.1 Names of Parts and Their Functions

1. PRODUCT OUTLINE

1.1 Product Outline

This printer, with ultra small 4-pl ink droplets and new light-and-dark ink system, delivers graininess-free, photographic-quality, high-resolution images.
In addition, the support of a high-resolution scanner cartridge and adapter for direct connection to digital cameras, as optional equipment, and the USB interface as standard equipment, prove this printer a highly value-added product.
This printer is intended to increase the market share where photo-realistic output is demanded, targeting users who need excellent photographic quality printing.

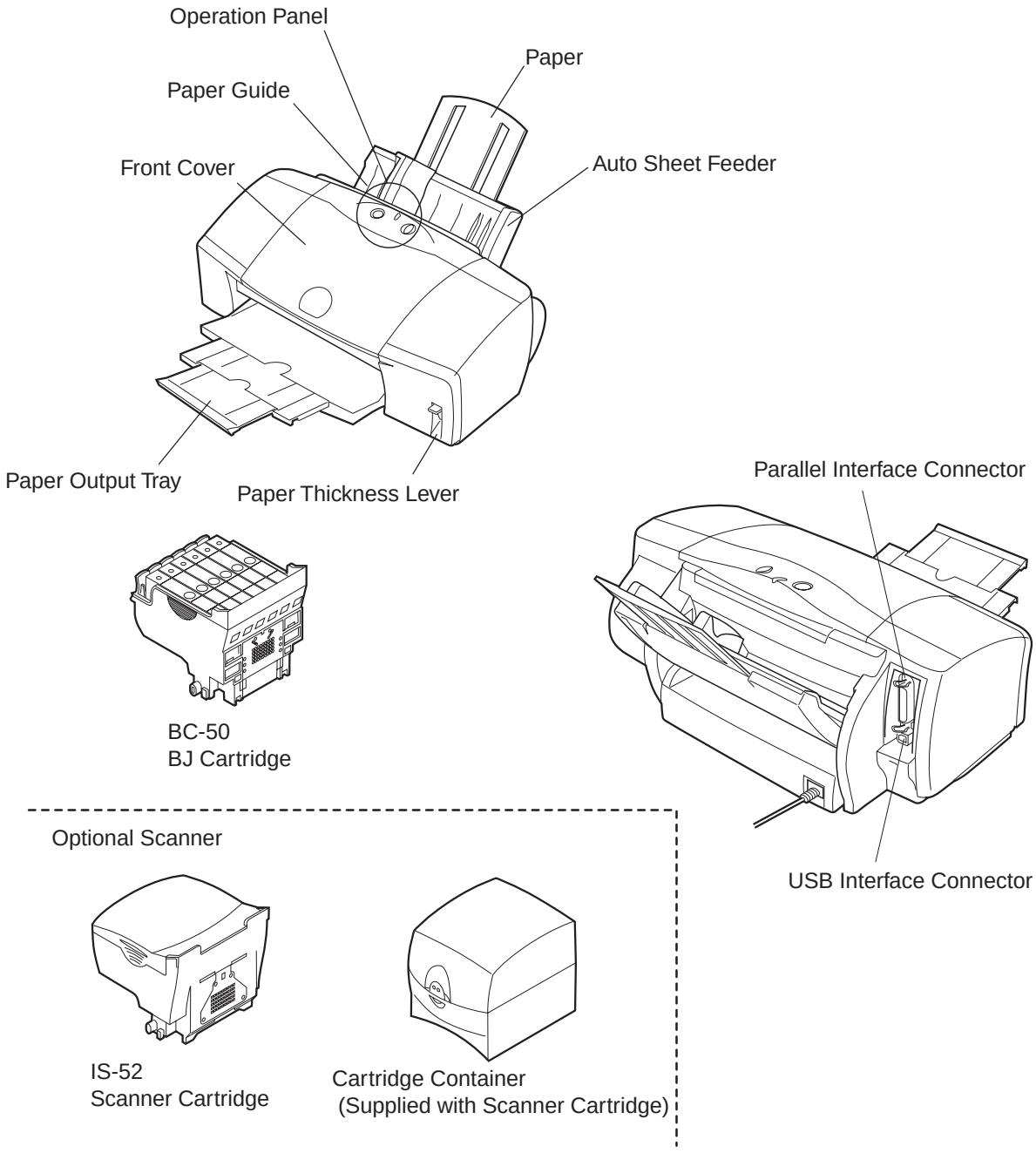

Figure 1-1 Printer Appearance

1.2 Features

1) Highest resolution photo imaging without any graininess. (4-pl ink droplets; new light-and-dark ink with light ink density of 1/6.)
2) Optionally available 600 dpi scanner cartridge.
3) Both IEEE1284-compatible, 8-bit parallel interface and USB interface, as standard equipment.
4) Individually replaceable ink tanks for each color for reduced running costs.
5) Ink-low detection using both optical and dot-counting systems and translucent ink tanks allow visual checking of the ink level.
6) A mechanism to allow manual correction of print position misalignment of each color, as well as in bi-directional printing.
7) A function to notify of the optimum head gap setting of the paper thickness lever.

2. SPECIFICATIONS

2.1 Main Unit Specifications

2.1.1 Main unit specifications

Type	Desktop serial printer			
Paper feeding method	Automatic and manual feeding			
Resolution	1200dpi x 1200dpi (maximum resolution)			
Throughput (Reference values) ppm		Draft	Standard	High
	Bk (PC Magazine)	3.15	2.24	0.37
	Color (A4 Full Page)	2.0	1.4	0.26
	Color (New Pattern)	2.0	1.4	0.26
Printing direction	1-pass/bidirectional 2-pass/unidirectional 4-pass/bidirectional 4-pass/unidirectional 8-pass/bidirectional Automatically switched over by driver, corresponding to selected media and print quality.			
Printing width	203.2 mm			
Line feed speed	161ms/line (for 256/1200-inch feed)			
Interface	IEEE 1284-compatible 8-bit parallel interface (Compatible/nibble/ECP) USB (without hub function)			
ASF capacity	Up to 10 mm (Approx. 100 sheets of 75 g/m^2 paper)			
Detection functions	Cover open	Yes		
	BJ cartridge installed	Yes		
	Scanner cartridge installed	Yes		
	Cartridge correctly installed	Yes		
	Ink-out	Yes		
	Paper-detection	Yes		
	Waste ink full	Yes		
	Paper width detection	No		
Acoustic noise during operation	Approx. 37 dB(A) (For 8-pass printing with a sheet feeder full of paper) (Sound pressure level: compliant with ISO9296)			
Environmental conditions	Operation	Temperature:	5 to 35°C	
		Humidity:	10-90% RH (No condensation)	
	Standby	Storage:	0-35°C	
		Humidity:	10-90% RH (No condensation)	
Power supply	Voltage/frequency	Power consumption	At standby	
	AC100-120V 50/60Hz	23W (max.)	8W	
	AC200-240V 50/60Hz	23W (max.)	8W	
External dimension	450 mm (W) x 327 mm (D) x 204 mm (H)			
Weight	Approx. 5.9 Kg (Excluding BJ cartridge)			
Certification	Electromagnetic radiance: VCCI, FCC, IC, CE Mark, EMC (Taiwan), C-tick Electrical safety: Electrical Safety Regulations, UL, C-UL, CB Report, CE Mark, FIMCO, GS, GCIB, SISIR, AS, Electrical Safety Regulations of Korea Environmental regulations: Blue Angel, Energy Star			
Optional parts	Scanner cartridge (*See Page 1-7*)			

2.1.2 Product life

Product life is either of the following periods, whichever is shortest.

(1) From the start of use until 15,000 sheets has been fed.

(2) From the start of use until 5 years lapses.

2.2 Paper Specifications

2.2.1 Paper sizes

Canon recommends the following papers:

Paper type		Size	Stacked in the ASF	Paper thickness lever position
Plain paper	Measurement: 64-90 g/m²	A4/B5/A5/ LTR/LGL	10 mm or less (Approx. 100 sheets of 75-g/m² paper)	Up
Color BJ paper	LC-301	A4/B5	75 sheets	Up
High-resolution paper	HR-101	A4/B5/LTR	80 sheets	Up
Glossy photo paper	GP-301	A4/LTR	10 sheets*	Up
Glossy photo film	HG-201	A4/LTR	1 sheet	Up
OHP film	CF-102	A4/LTR	10 sheets**	Up
BJ cloth	FS-101	(L)356 x (W)251 mm	1 sheet	Down
Banner paper	BP-101	A4/LTR	1 sheet	Down
T-shirt transfer	TR-201	A4/LTR	1 sheet	Up
Glossy photo card	FM-101	(L)216 x (W)119 mm	1 sheet***	Up
Envelope	COM#10	(L)105 x (W)241 mm	10 sheets or less	Down
	DL	(L)110 x (W)220 mm	10 sheets or less	Down
Photo paper pro	PR-101	A4/LTR	1 sheet*	Up
Thick paper	Measurement: 91-500 g/m²	A4/LTR	Manual feed only	Down

* Always use GP-301/PR-101 with the cleaning plate underneath it.

** Always use OHP film with a sheet of plain paper beneath it.

*** Always use glossy photo paper with the associated auxiliary sheet beneath it.

2.2.2 Paper measurement

Automatically-fed paper	64-90 g/m²
Manually-fed paper	64-500 g/m² (up to 0.6 mm)

2.2.3 Printable area

Refer to *Figure 1-2 Printable Area*.

2.3 BJ Cartridge

Construction	6 color integrated head, with separately-replaceble ink tanks for each color
Print head	256 x 6 nozzles (Placed in line for each color)
Ink color	BK, C, M, Y, Photo-C, Photo-M
Ink tank	6 separate tanks (One tank for each color)
Weight	Approx. 80 g (excluding ink tanks)
Cartridge life	5000 sheets (7.5%-duty print pattern) or 2 years in box/1 year out of box.
Print capacity	Approx. 240 sheets/tank (7.5%-duty print pattern)

Note) The BJ head, available as a consumable part, does not include ink tanks.

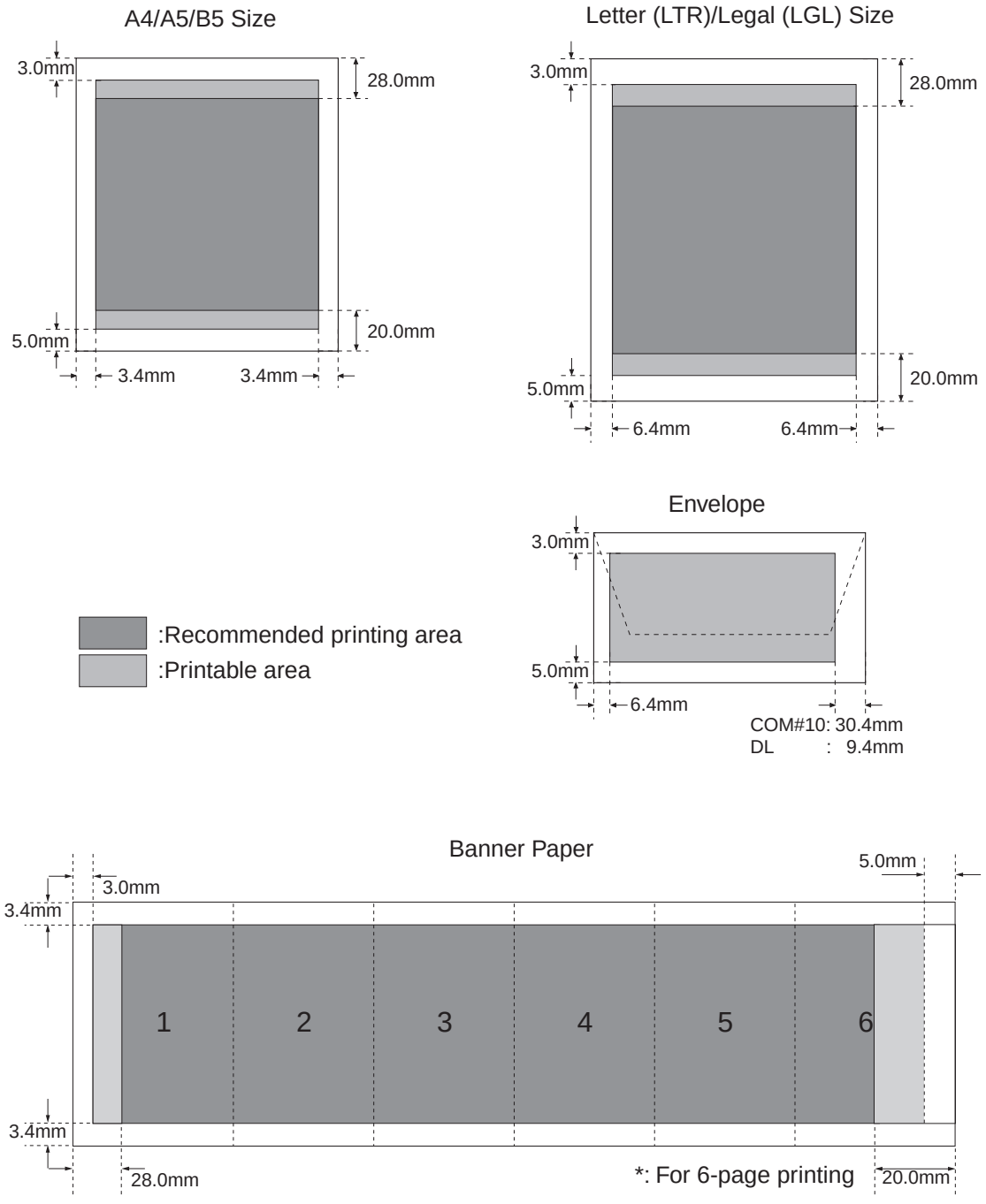

Figure 1-2 Printable Area

2.4 Interface Specifications

2.4.1 Parallel interface

1) Interface type
IEEE 1284 compatible parallel interface
2) Data transfer:
8-bit parallel transfer method (Compatible/nibble/ECP mode supported)
3) Signal voltage levels

Input:	"Low" level: 0.0V to +0.8V
	"High" level: +2.4V to +5.0V
Output:	"Low" level: 0.0V to +0.8V
	"High" level: +2.4V to +5.25V

4) Input/Output
Each signal pulled up with +5V
5) Interface cable
Twisted-pair double shielded cable
Material: AWG No. 28 or higher (AWG: American Wire Gauge)
Length: Up to 2.0 m.
6) Interface connector:

Printer-side	Amphenol 57-40360 (or equivalent)
Cable-side	Amphenol 57-30360 (or equivalent)

7) Input/Output signal and pin arrangements
Refer to *Part 5: 2. CONNECTOR POSITIONS AND PIN ASSIGNMENT* (Page 5-6) for details.

2.4.2 Serial (USB) interface

1) Interface type
USB Interface (Universal Serial Bus; USB Specification Release 1.0)
2) Data transfer:
Control transfer method
Bulk transfer method
3) Signal voltage level
Input:

Input difference sensitivity:	+0.2V (Max)
Common-mode difference:	+0.8V to +2.5V

Output:

Static output high:	+2.8V to +3.6V
Static output low:	0.0V to +0.3V

4) Input/Output
Each signal pulled up with 3.3V
5) Interface cable

Cable	Twisted pair shielded cable, up to 2.0 m
	Full-speed mode must be supported.
Material:	AWG No. 28 or higher (AWG: American Wire Gauge)

6) Interface connector

Printer-side	USB standard, Series B receptacle
Cable-side	USB standard, Series B plug

7) Input/Output signal and pin arrangements
Refer to *Part 5:2. CONNECTOR POSITIONS AND PIN ASSIGNMENT* (Page 5-6) for details.

2.5 Printer Driver

The drivers that can be used for this printer:

1) For Windows:
   Raster driver (For Win3.1/95/98)
   Raster driver (For Win NT4.0/(5.0))
2) For Macintosh:
   Macintosh driver for USB I/F
   Serial I/F drivers are not available.

2.6 Scanner Cartridge IS-52 (Optional)

Type	Cartridge replacement type color scanner
Light source	3 LED's for RGB
Resolution	600x600, 300x300, 200x200, 150x150, and 75x75 dpi
Paper width	208.2mm
Scannable band width	Up to 10.8mm
Paper thickness	Up to 0.25mm
Operation environment	OS: Win98/95/NT4.0, Mac OS 8.1 or later I/F: Parallel (IEEE1284-compliant)/USB Memory: 8MB (16MB or more recommended.) Unused Disk space: (50MB at least)
Life span	1200 sheets (A4 paper)

3. NAMES OF PARTS AND THEIR FUNCTIONS

3.1 Names of Parts and Their Functions

The following shows the names of the printer parts and their major functions:

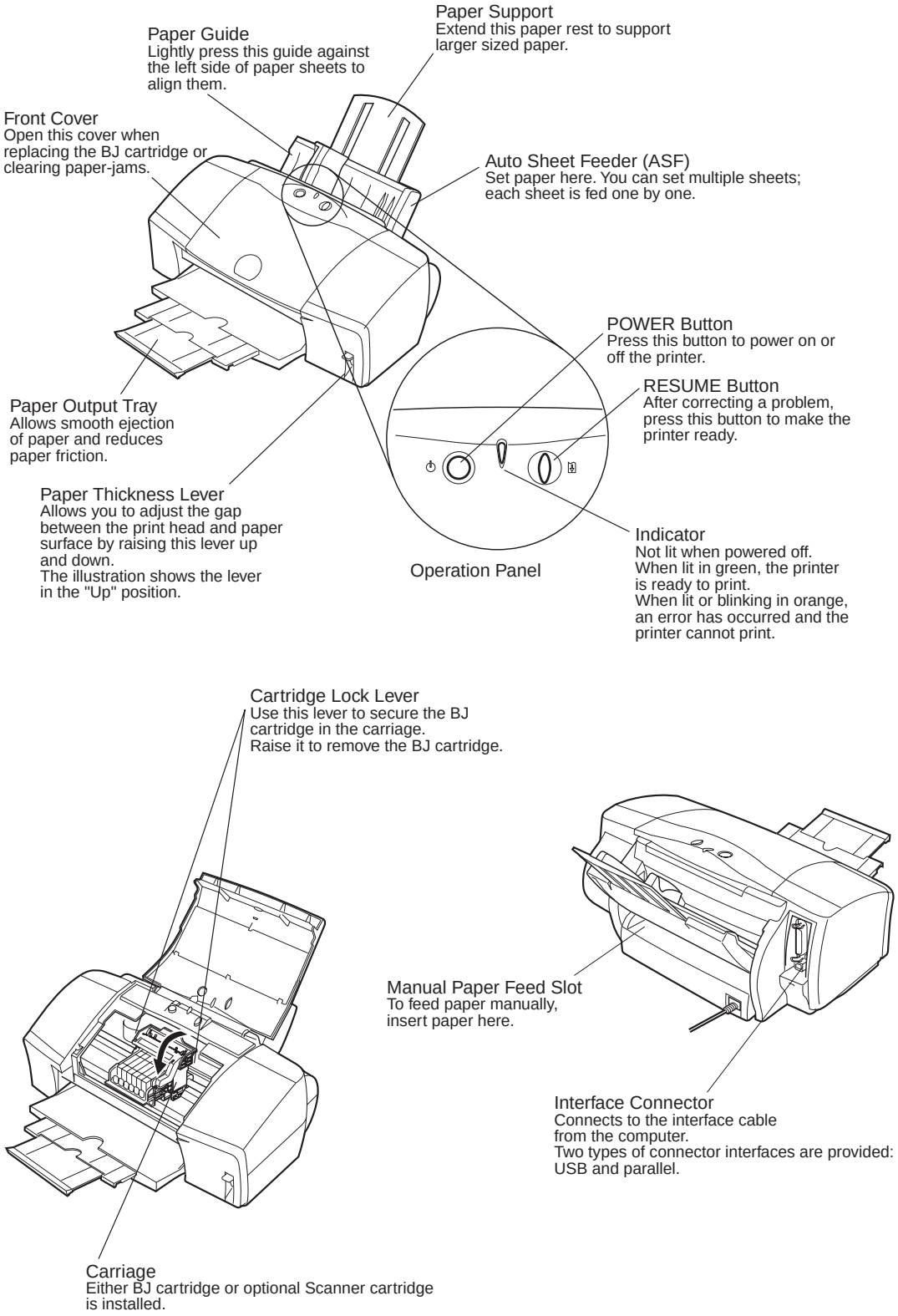

Figure 1-3 Names of Parts and Their Functions

Part 2

MAINTENANCE

Page

2 - 1 1. PERIODICAL REPLACEMENT/MAINTENANCE
2 - 1 1.1 Parts for Periodic Replacement
2 - 1 1.2 List of Periodic Maintenance
2 - 2 2. DISASSEMBLY AND REASSEMBLY
2 - 2 2.1 List of Tools
2 - 3 2.2 Operation Precautions
2 - 6 2.3 Precautions for Disassembling and Reassembling the Printer
2 - 8 2.4 Grease Application
2 - 9 2.5 Adjustment/Setting Procedures
2 -12 3. OPERATION CHECK AFTER DISASSEMBLING/REASSEMBLING
2 -12 3.1 Confirmation Methods
2 -13 4. TRANSPORTING THE PRINTER
2 -13 4.1 Transporting the Printer

1. PERIODICAL REPLACEMENT/MAINTENANCE

1.1 Parts for Periodic Replacement

Level	Parts for periodical replacement
User	None
Service personnel	None

Level	Consumable
User	BJ cartridge (Ink tanks not included) Ink tank (Black) Ink tank (Cyan) Ink tank (Magenta) Ink tank (Yellow) Ink tank (Photo cyan) Ink tank (Photo magenta)
Service personnel	None

1.2 List of Periodic Maintenance

Level	Location
User	None
Service personnel	None

2. DISASSEMBLY AND REASSEMBLY

2.1 List of Tools

The following are the tools necessary for disassembly and reassembly:

Ordinary tools	Note
Philips screwdriver	For removing and replacing screws
Blade screwdriver	For removing plastic parts
Long-nose pliers	For removing and replacing springs
Tweezers	For removing and installing flexible cables
Flat brush	For applying grease (one per grease type)
Multimeter	For troubleshooting

Special tools (part No.)	Note
Grease MOLYKOTE PG-641 (CK-0562-000)	To be applied to specified locations (*See Page 2-8*)
Grease EU-1 (QY9-0037-000)	To be applied to the portion of the guide shaft which the carriage slides over.

2.2 Operation Precautions

2.2.1 Ink paths

Be careful not to touch the ink paths. Ink on hands could stain the printer, work table, or clothes. The ink paths include the BJ cartridge ink tank outlet, the BJ cartridge ink filters and nozzles, the maintenance jet receiving section, the head caps, the wipers, and the waste ink absorber.

CAUTION

The ink is not harmful to the human body, but contains some organic solvents.
Black, cyan, magenta, photo cyan, and photo magenta ink contain glycerin 56-81-5, isopropyl alcohol 67-63-0, ethylene glycol 107-21-1, and di-ethylene glycol 111-46-6 respectively. Yellow ink contains glycerin 56-81-5 and isopropyl alcohol 67-63-0.
Be careful not to get the ink into your mouth or eyes. If the ink gets into your eyes, wash with plenty of water and consult a doctor. In case a large amount of ink has been swallowed, consult a doctor immediately. The ink contains dyes. If clothing is stained with the ink, the ink may not be removed completely.

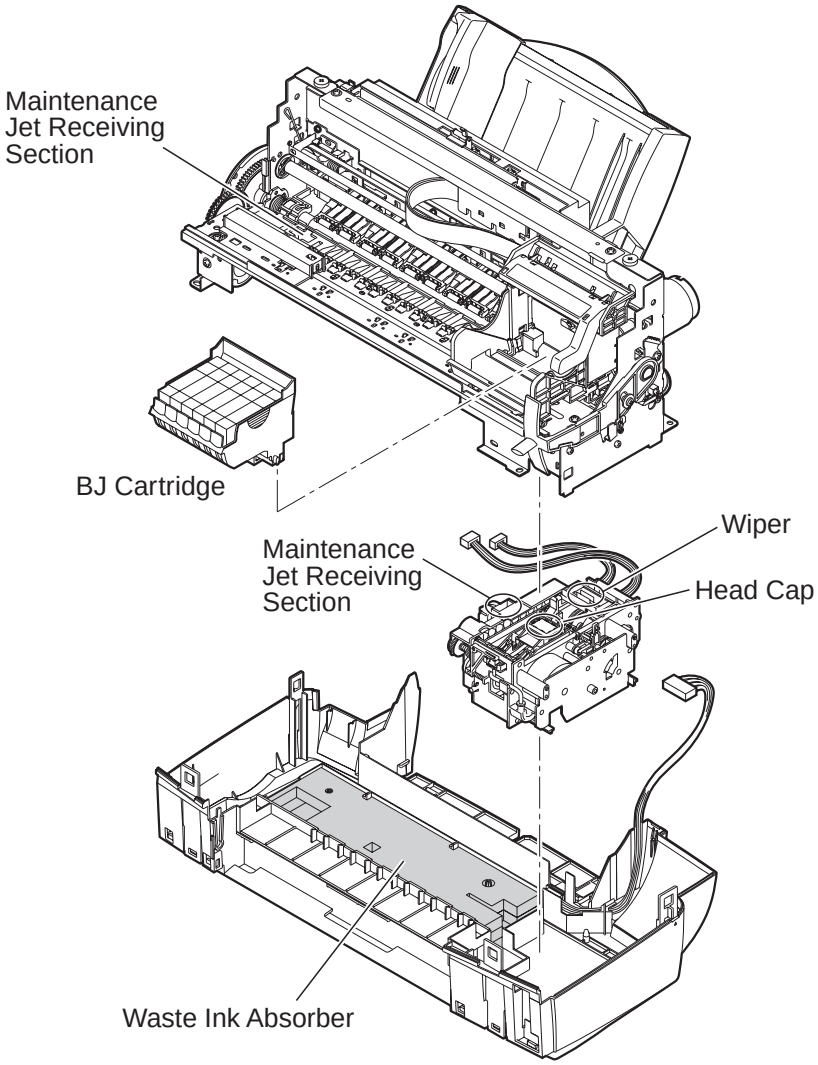

Figure 2-1 Ink Paths

2.2.2 Ink mist

The BJ cartridge ejects ink onto the paper during printing. After the printer is used for a long period or used heavily, the ink mist bouncing back from the paper could accumulate and soil the front cover, platen, and the area around the operation panel, purge unit, and paper output tray.
Carefully wipe off the ink mist with a soft dampened cloth so that hands or clothing will not be stained by soiled parts during servicing.
Also, be careful not to smudge the pick roller when removing the upper cover.

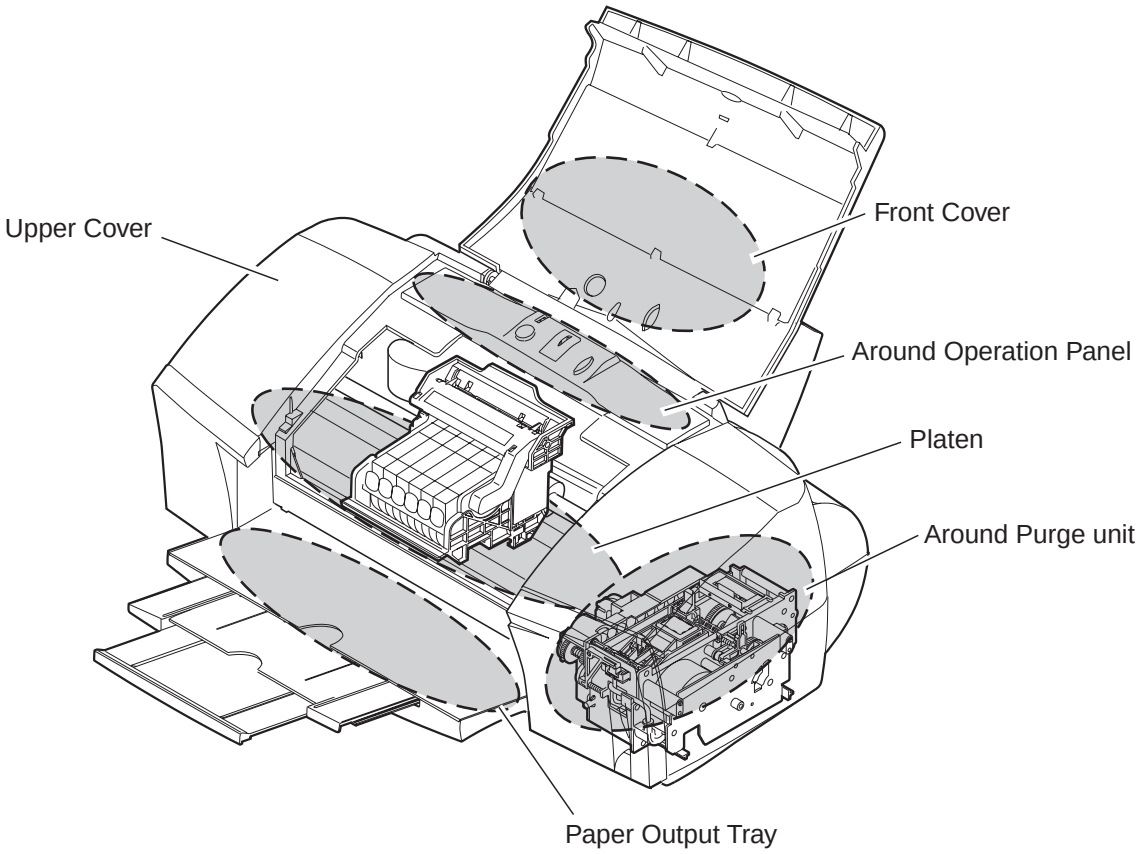

Figure 2-2 Ink Mist

2.2.3 Precautions for damage due to static electricity

Static electricity can be generated by clothing rubbing against each other and may accumulate in the body. If you touch electrical elements, the discharge of static electricity could damage them, or change their electrical characteristics. For this reason, avoid touching the ink sensor contacts or the printer's BJ cartridge contacts.

2.2.4 Precautions for transporting the printer

When turned off by the *POWER* button, the BJ cartridge is capped and the carriage is locked in place at the capping position by the lock arm. When the printer cannot be powered off by the *POWER* button for transportation, etc., move the carriage to the capping position by hand and secure it with tape before transporting the printer. Remove the ink tanks and keep them in a vinyl bag while the printer is being transported.

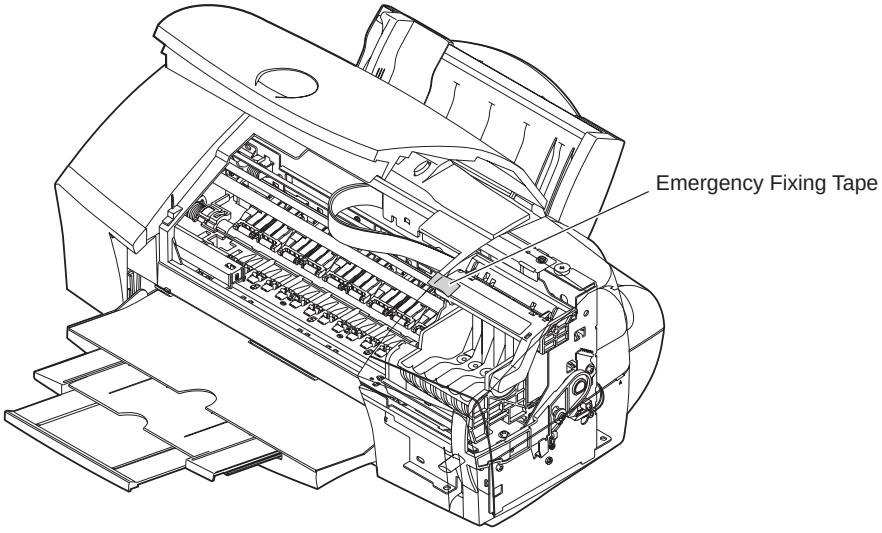

Figure 2-3 Capping Position

2.2.5 Precautions on spur tip deformation

Take care not to bend the tips of the spurs. The tips of the spurs make contact with printed paper and are contaminated with ink, but due to their small surface contact area, the tips, cleaned by the spur cleaners, will not stain the printed paper. However, if the tips are bent and their contact surface area increases, they collect more ink and are not easily cleaned by the spur cleaners, and thereby stain the printed paper by making dotted lines on it.

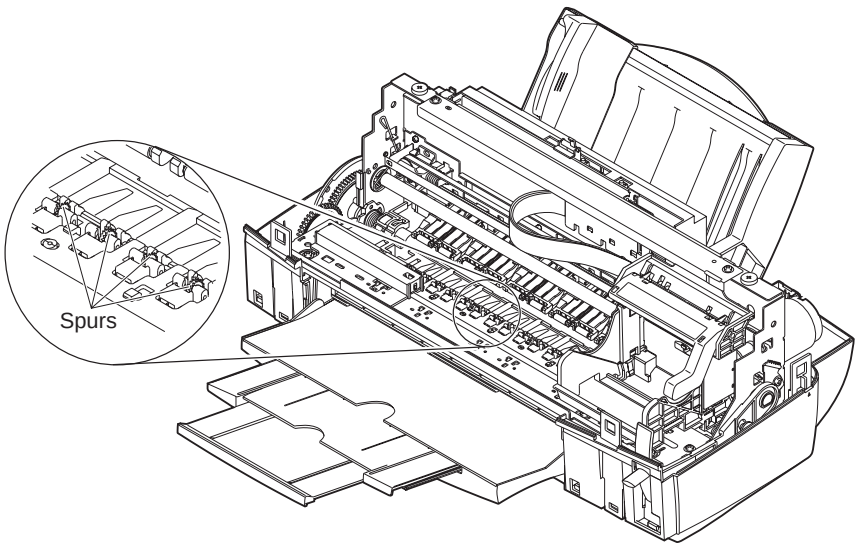

Figure 2-4 Spur Unit

2.3 Precautions for Disassembling and Reassembling the Printer

Note the following when disassembling or reassembling the printer. When disassembling or reassembling the printer, refer to the parts catalog. The numbers in the parts catalog illustrations indicate the disassembly sequence.

2.3.1 Unlocking the carriage

When the printer is shipped from the factory (or when the cartridge is installed and the power has been turned off normally), the carriage is locked in the capping position to secure the cartridge during transportation.

When the printer is powered on properly, the carriage is unlocked automatically. If the printer cannot be powered on normally, it will be necessary to manually unlock the carriage. This can be done by turning the gear of the purge unit in the direction of the arrow by finger, as shown in *Figure 2-5 Unlocking the Carriage*.

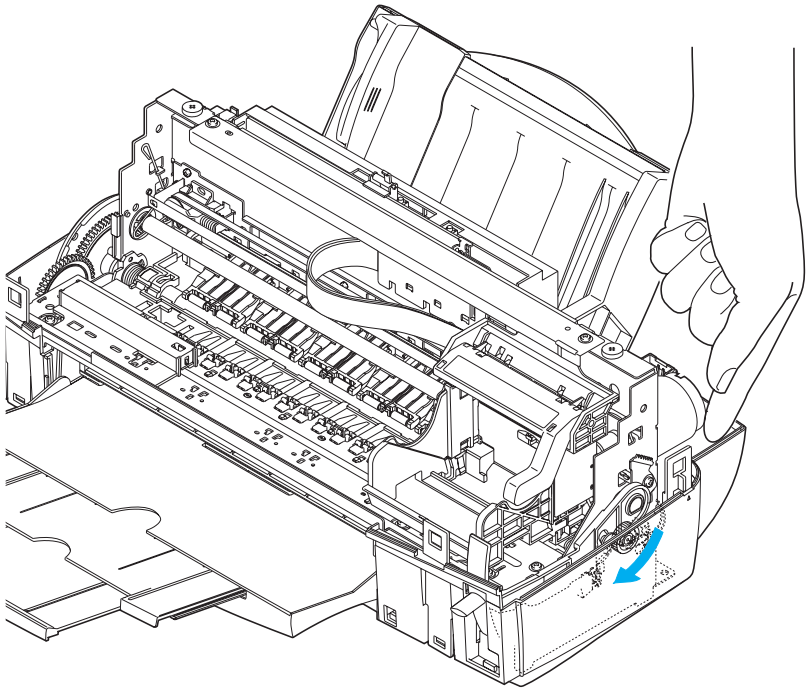

Figure 2-5 Unlocking the Carriage

2.3.2 Removing/installing self tap screws

The printer unit is secured to the lower case with tap screws. Once the tap screws have been removed, pieces of the molding remain attached to the screw threads. Reinstalling the tap screws in this condition can damage the screw threads. To prevent this, when reinstalling screws, remove the remains in advance or, where possible, use new screws. Also, blow away any remains on the mold before reinstalling the tap screws.

2.3.3 Adjustable bushings supporting the carriage shaft

The adjustable bushings supporting the carriage shaft are adjusted and secured to the printer frame so that the ideal gap, or head gap, between the BJ cartridge nozzle and platen is maintained for best print quality.

The fixing screws are painted red to protect against careless removal. Do not loosen the fixing screws.

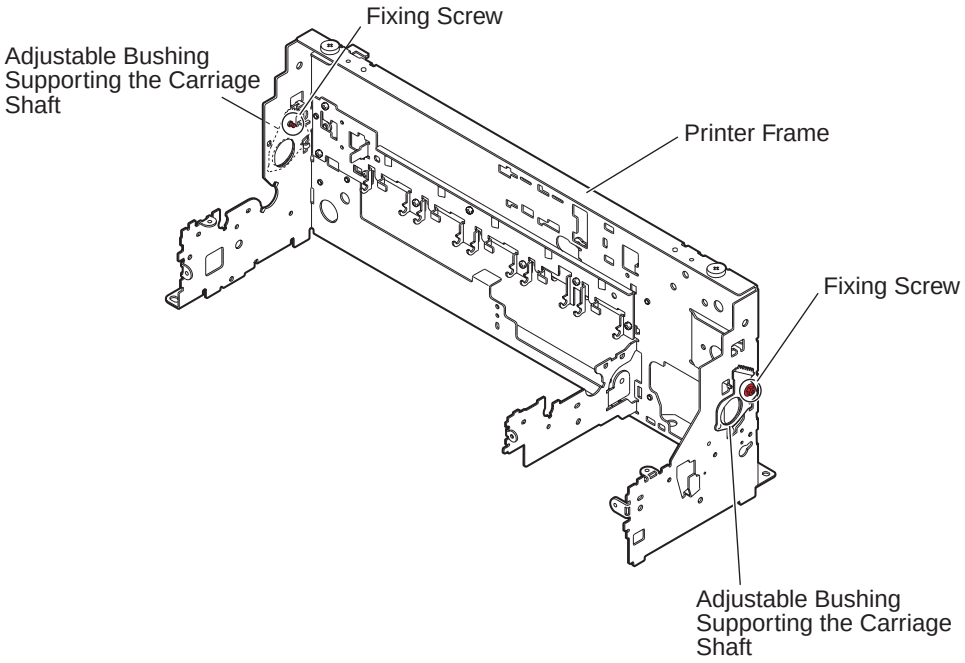

Figure 2-6 Adjustable Bushings Supporting the Carriage Shaft

2.3.4 Feed gear

Be careful not to touch the gears in the paper feed unit, especially the feed roller gear, during disassembling or reassembly. Although covered, even slight damage to it could affect paper feeding when printing at high resolution.

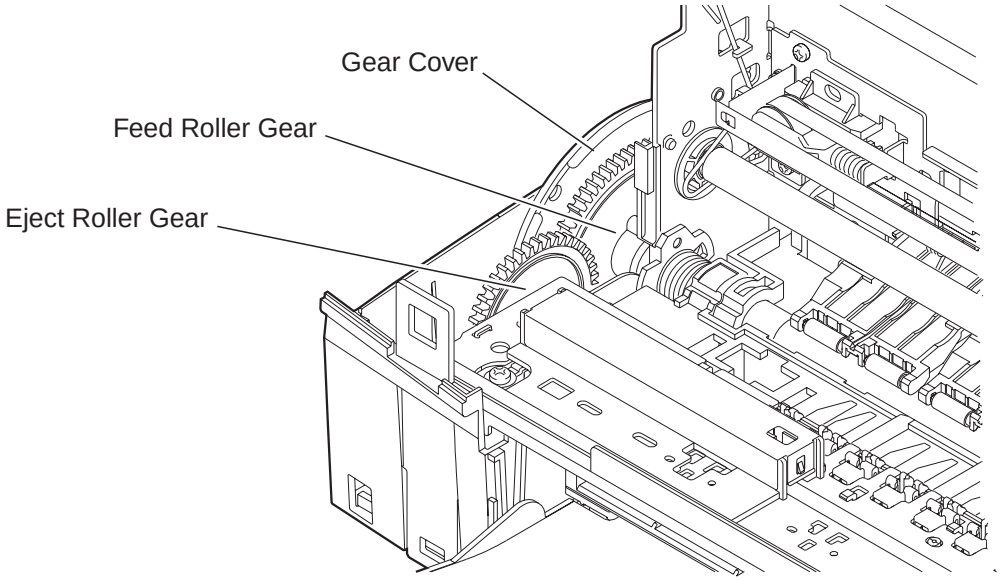

Figure 2-7 Precautions on Feed Gears

2.4 Grease Application

Apply greases at the points shown below.

Apply a thin film of grease using the flat brush. For the grease (EU-1) for the grease pad, do not use a brush but apply directly. For printer disassembly and reassembly procedures, refer to the parts catalog.

CAUTION

When applying greases, be careful to not get any on the wiper, cap, or encoder film. If grease is applied to them, wipe them clean immediately.

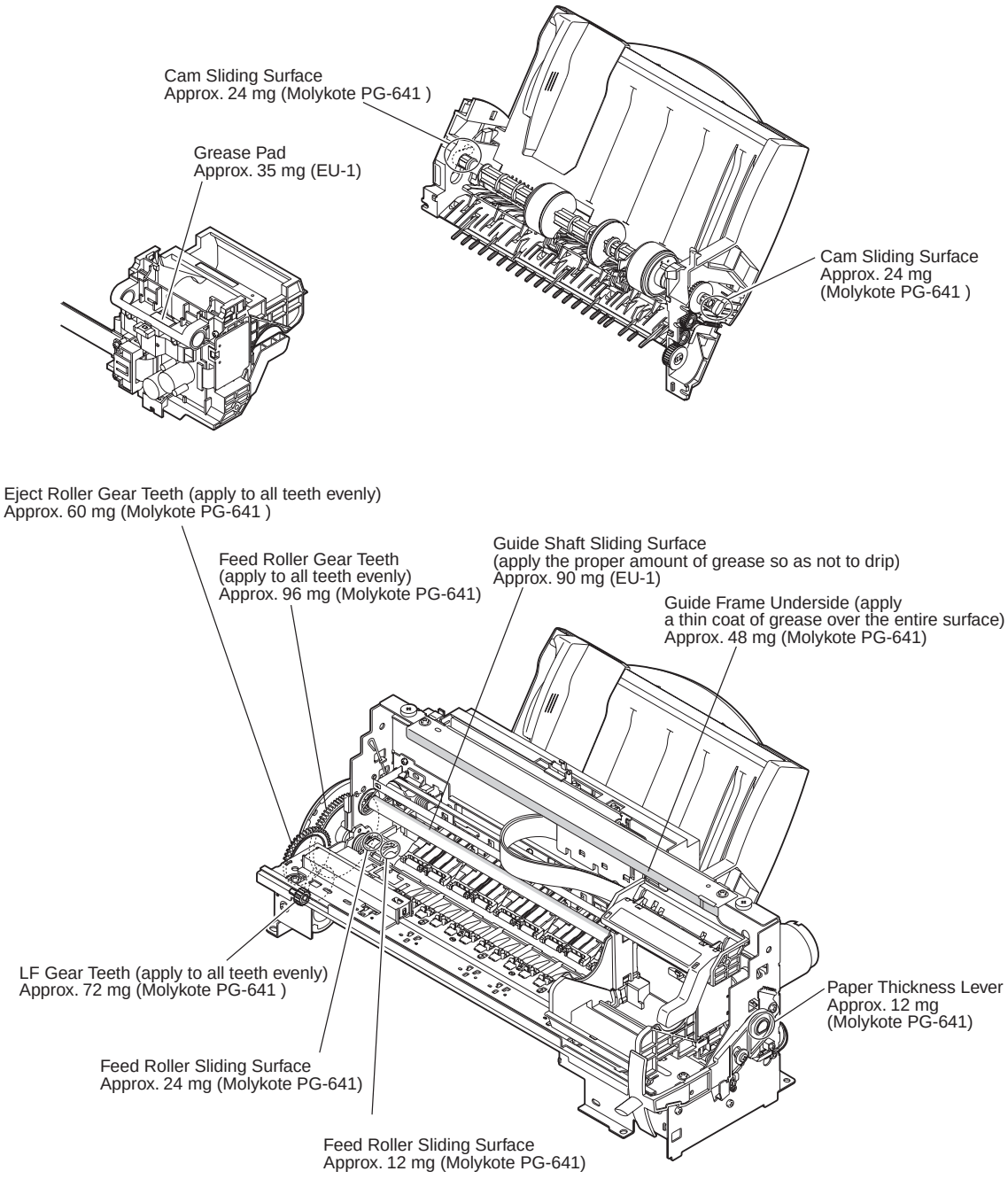

Figure 2-8 Grease Points

2.5 Adjustment/Setting Procedures

2.5.1 Adjustments (Timing, adjustment, time, tool)

(1) User level

Timing	Adjustment	Time	Tool
When BJ cartridge is replaced.	Adjust print head position	3 min.	HR-101 (A4)
When pick-up roller becomes contaminated.	Clean pick-up roller	3 min.	Cleaning plate

(2) Service personnel level

Timing	Adjustment	Time	Tool
When BJ Cartridge is replaced. (Replacement of carriage parts)	Adjust print head position	3 min.	HR-101 (A4)
When logic board/waste ink absorber is replaced	Set EEPROM	1 min.	None
When pick-up roller becomes contaminated.	Clean pick-up roller	3 min.	Cleaning plate

2.5.2 Cleaning the pick-up roller

If surface-processed paper or High-Resolution Paper (HR-101) is used in large quantity, paper feeding may be affected due to paper dust adhering to the pick-up roller. If this happens, clean the pick-up roller inside the printer with the cleaning plate, supplied with the unit.

You can perform this operation by setting the printer into *Service Mode*, or via the printer drive utility. For details, refer to *Part 3: 2.1 Service Mode Operations* (Page 3-8) and *Part 3: 1.4.1 Function settings using the printer driver* (Page 3-5).

2.5.3 Print head position adjustment

As a result of inherent product variations in each BJ cartridge or its specific seating position, inaccurate dot placement may occur, resulting in poor printing. To correct this, after installing the BJ cartridge, perform the automatic print head position adjustment, one of the utilities the printer driver package provides. If a computer is not available, you can perform the print head position adjustment in *Service Mode*. For the procedures, refer to *Part 3: 2.1 Service Mode Operations* (Page 3-8). Set at least one sheet of A4 high-resolution paper into the ASF, and carry out the print head position adjustment from the printer driver's Maintenance sheet.

Figure 2-9 Print Position Adjustment Pattern

CAUTION

If normal paper is used to adjust the print head position, the ink may bleed, preventing accurate determination. Use High-Resolution Paper (HR-101) or Glossy Photo Paper (GP-301), which provide higher quality printing.
Also, be sure to perform the adjustment with the paper thickness lever raised.

2.5.4 Setting the EEPROM

The EEPROM on the logic board stores the total amount of waste ink absorbed, function settings, and other information specific to the printer. For this reason, be aware of the following when servicing the printer.

1) Before repair

You can check the data stored in the EEPROM by performing the test print or EEPROM information print for servicing. In particular, the number of total sheets passed will give a good idea of how frequently the printer has been used.

2) After logic board replacement

Visually check the waste ink absorber's ink level following the procedures in *Part 3: 2.5 Setting the Waste Ink Counter* (Page 3-11), and replace the absorber or set the counter as necessary. The counter can be set to 0% (Reset), 25%, 50%, and 75%. The EEPROM data of a replacement logic board is not defined. After replacing the logic board, you must always reset the EEPROM, check the waste-ink absorber, set the ink counter, set the model name, and adjust the head position.

3) After waste ink absorber replacement

After replacing the waste ink absorber following an ink-full warning or error, reset the waste ink counter.

Previous EEPROM data cannot be checked from the *Service Mode* once the EEPROM has been reset. Always perform the check before resetting the EEPROM. All information such as function status, number of sheets passed, waste ink amount, etc., except for the USB serial number, will be lost when the EEPROM is reset. It is not possible to write data, such as function status and the number of sheets passed, of the old EEPROM to the new EEPROM.

This printer presumes that the ink full alarm/error does not occur before the life of the printer has been reached. However, depending on the usage conditions, such as frequency of powering on/off and frequency of the BJ cartridge replacement, the waste ink amount varies. As a result, the frequency of the alarm/error also varies.
The ink full alarm occurs when the absorbed ink amount approaches a limit. In this case, although you can operate the printer again by pressing the *RESUME* button, the ink full error will occur in the end. (At that time, you can no longer continue operation by pressing the *RESUME* button.)
Refer to *Part 3: 2.1 Service Mode Operations* (Page 3-8) for details on how to check/reset stored data in the *Service Mode*.

3. OPERATION CHECK AFTER DISASSEMBLING/REASSEMBLING

3.1 Confirmation Methods

After reassembling, confirm the operation of the printer by conducting the following procedures:

1) Test print for servicing using the printer only.
   Verify correct print out using the method stated in *Part 3: 2.1 Service Mode Operations* (Page 3-8).

After replacing either the logic board or the waste ink absorber, in addition to (1), it is necessary to confirm the following points:

When the:	Check items:
Logic board is replaced	On the service/factory test print, confirm that the ROM version and model name are correct, and that the number of sheets passed has been cleared, and the waste ink counter is set appropriately. Printing the nozzle check pattern via the printer driver is possible.
Waste ink absorber is replaced	On the service/factory test print or EEPROM information print, confirm that the total waste ink amount has been cleared.

4. TRANSPORTING THE PRINTER

To prevent the ink from leaking or drying out in the BJ cartridge nozzles during transportation, keep the BJ cartridge installed in the printer, or stored in the cartridge container.
The ink tanks must be removed from the BJ cartridge and put into a vinyl bag while the printer is being transported.
Transport the printer (for return after repair) with the carriage locked in place.
Refer to *Part 2: 2.2.4 Precautions for transporting the printer* (Page 2-5).

4.1 Transporting the Printer

When transporting the printer, follow the procedures below:

1) Remove the ink tanks from the BJ cartridge and place in a vinyl bag.
2) Press the *POWER* button to turn off the printer. After the printer moves the carriage to the home position for cleaning and locks the carriage in place, the indicator will go out.
3) Disconnect the interface cable(s).
4) Unplug the AC power cord from the wall outlet.
5) Open the front cover and visually confirm that the carriage is locked in the capping position (on the right side of printer). If the carriage is not in the capping position, move it manually to the capping position by using the carriage belt, and secure it there with tape.
6) Close the front cover.
7) Pack the printer in its original packing material. If the original packing materials are not available, pack the printer in sufficient shock absorbing material.

Do not unplug the printer before switching off the printer with the *POWER* button, otherwise, the BJ cartridge's nozzles will not be capped, which may result in ink leaking or drying-out.

This page intentionally left blank

Part 3

OPERATION

Page

3 - 1 1. FUNCTIONS RELATED TO PRINTER OPERATION
3 - 1 1.1 Error Display
3 - 3 1.2 Descriptions of Error Indications
3 - 4 1.3 BJ Status Monitor
3 - 5 1.4 Function Settings
3 - 6 1.5 Off-line Operation
3 - 8 2. SERVICE MODE
3 - 8 2.1 Service Mode Operations
3 - 9 2.2 Service Test Print
3 -10 2.3 Printing EEPROM Information
3 -11 2.4 Resetting the EEPROM
3 -11 2.5 Setting the Waste Ink Counter
3 -12 2.6 Setting the Model
3 -12 2.7 Adjusting the Head Position
3 -13 2.8 Roller Cleaning

1. FUNCTIONS RELATED TO PRINTER OPERATION

1.1 Error Display

This printer displays errors using the indicator and beeper. If an error occurs, the printer displays an error code in the status monitor to show the error status.

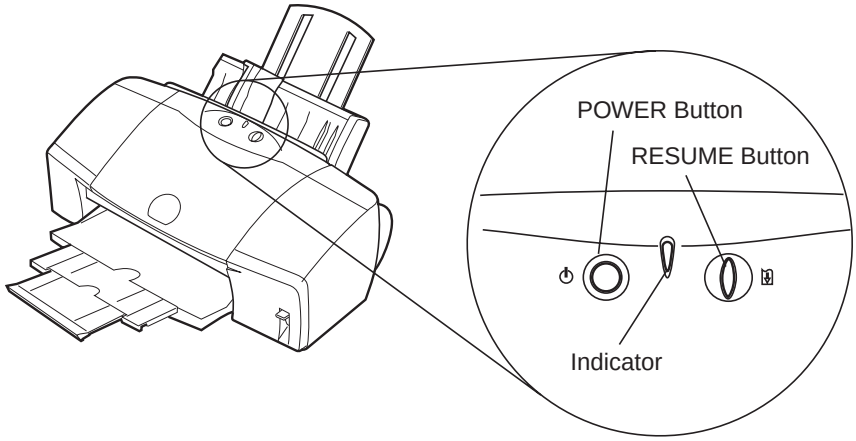

Figure 3-1 Operation Panel

For more information on corrective measures against the following errors, refer to *PART 4: TROUBLESHOOTING*.

TABLE 3-1 ERROR DISPLAY

Error	Indicator	Beeper	Error code	Reference page
[Recoverable by users]				
Paper feed error	Lights in Orange	2 times		Page 4-11
Paper jam error	Lights in Orange	3 times		Page 4-11
Ink out error	Lights in Orange	4 times		Page 4-12
BJ cartridge not-installed error	Lights in Orange	5 times		Page 4-13
BJ cartridge mis-installed error	Lights in Orange	6 times		Page 4-13
BJ cartridge error	Lights in Orange	7 times		Page 4-13
Waste ink full warning	Lights in Orange	8 times		Page 4-9
[Unrecoverable by users]				
Carriage error	Blinks in Orange in 2 times	10 times	5100*	Page 4-6
Purge error	Blinks in Orange in 4 times	10 times	5C00*	Page 4-7
ASF sensor error	Blinks in Orange 5 times	10 times	5700*	Page 4-8
Temperature sensor error	Blinks in Orange 6 times	10 times	5400*	Page 4-5
Waste ink full error	Blinks in Orange 7 times	10 times	5B00*	Page 4-9
Head temperature error	Blinks in Orange 8 times	10 times	5200*	Page 4-10
EEPROM error	Blinks in Orange 9 times	10 times	6800*	Page 4-5
ROM error	Blinks in Orange 10 times	10 times	6100*	Page 4-5
RAM error	Blinks in Orange 11 times	10 times	6300*	Page 4-5
Other hardware error	Blinks in Orange 12 times	10 times	6500*	Page 4-5
[Other warning]				
Ink-low warning	No indication (To be reported to host)	None		
Head temperature warning	No indication (To be reported to host)	None		

* See Page 3-10

In the case of a user-recoverable error, the beeper will beep again when the *RESUME* button is pressed; you can confirm the type of the error by counting the number of beeps.

1.2 Descriptions of Error Indications

For how to resolve errors, refer to *Part 4: TROUBLESHOOTING*.

Errors recoverable by users:

1) Paper feed error
   Paper feed operation fails to feed paper.
2) Paper jam error
   Paper ejection doesn't occur, even if the eject operation is done for 14.8-inches (23-inches, in the case of banner paper).
3) Ink out error
   Indicated when one of the ink tanks is out of ink (ink chamber and sponge).
4) BJ cartridge not-installed error
   The BJ cartridge is not installed.
5) BJ cartridge mis-installed error
   The scanner cartridge is incorrectly installed for printing, or BJ cartridge is installed for scanning.
6) BJ cartridge error
   Heater resistance value (rank) of the BJ cartridge is wrong.
7) Waste ink full warning
   The amount (stored in EEPROM) of waste ink absorbed has reached 95% of the defined capacity.

Errors non-recoverable by users

8) Carriage error
   Incorrect carriage position or speed.
9) Purge error
   Purge sensor cannot detect the cam flag correctly.
10) ASF sensor error
    ASF sensor cannot detect the pick-up roller flag correctly.
11) Temperature sensor error
    The temperature inside the printer increases abnormally when the scanner cartridge is installed. (This error does not occur when the BJ cartridge is installed.)
12) Waste ink full error
    The data (stored in EEPROM) representing the amount of waste ink absorbed exceeds 100% of the defined capacity.
13) Head temperature error
    The internal temperature of the BJ cartridge is too high (exceeding 90°C).
14) EEPROM error
    EEPROM sum check value at soft power-on does not match the pre-defined value.
15) ROM error
    ROM check at hard power-on is NG. (The error occurs at soft power-on.)
16) RAM error
    RAM check at hard power-on is NG. (The error occurs at soft power-on.)
17) Other hardware error
    Another internal error has occurred.

Other warnings (To be reported to the host, but not to be reported to the printer as an error.)

18) Ink-low warning
    The ink in one of the ink tank chambers has run out.
19) Head temperature warning
    When the cover is opened, the temperature inside the BJ cartridge has reached a pre-determined value (60-90°C).

1.3 BJ Status Monitor

The BJ status monitor window shows the printer's conditions and print-job progress. Print-jobs can be cancelled from this window.

1.3.1 Main functions of the BJ status monitor

1) Show the printer's conditions and progress in real-time by means of graphics and messages.
2) Display error types and show recommended recovery methods.
3) Indicate ink-out warnings by icon and name.
4) Abort the current print-job.

1.3.2 Items displayed on the BJ status monitor

1) Printer designation
2) Document name
3) Printer conditions (including brief corrective measure when in error)
4) Date and time of print start
5) Progress status
6) Number of pages printed
7) Print-job abortion
8) Cartridge installed (Photo-cartridge is always displayed.)
9) Ink out warning

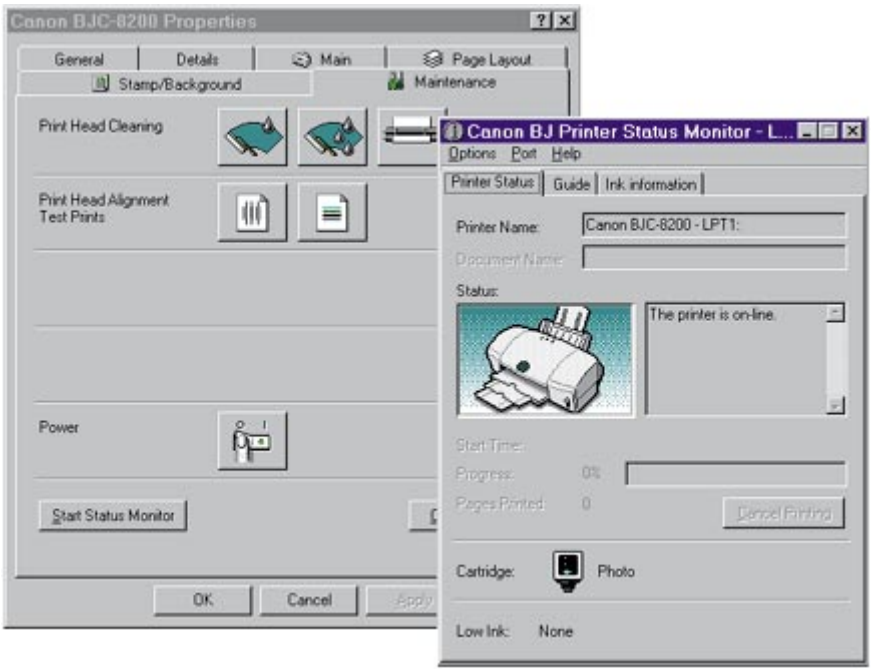

Figure 3-2 BJ Status Monitor (Sample)

1.4 Function Settings

Since this printer has no function selector for setting functions, the dedicated printer driver is used for setting functions.

1.4.1 Function settings using the printer driver

From the Maintenance menu of the dedicated printer driver, you can set/execute the following items.

1) Cleaning
2) Head refreshing (long cleaning)
3) Clean the pick-up roller
4) Print the nozzle-check pattern
5) Adjust the head position.
6) Power off the printer
7) Launch the status monitor
8) Special settings
   - Enable ECP mode (disabled by default)
   - Enable high speed printing (enabled by default): printer's response time ($\overline{\text{ACKNLG}}$) is changed from 4 to 0.9 ms.

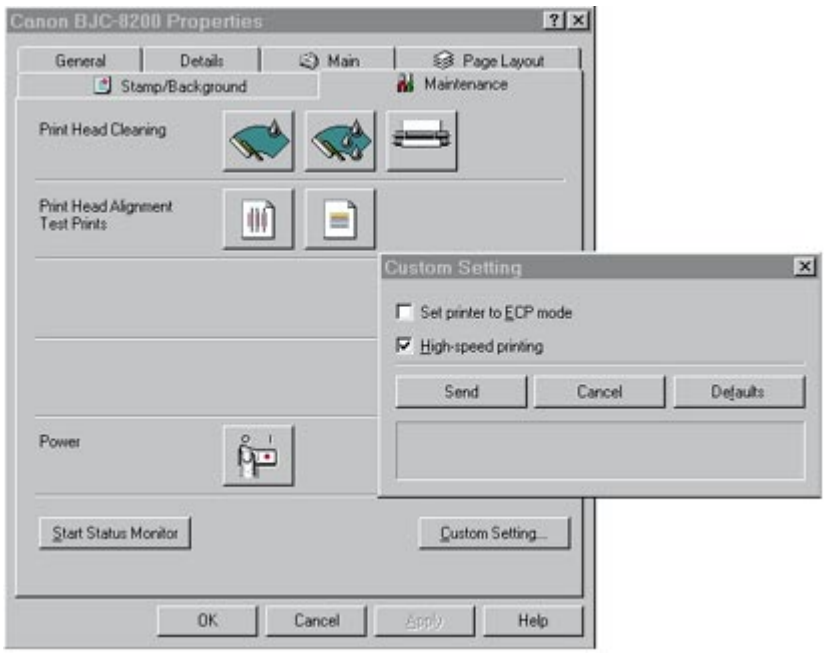

Figure 3-3 Printer Driver Utility (Sample)

1.5 Off-line Operation

This printer, when powered on (soft power-on), has an off-line operation function that allows the printer to operate independently of the computer. With the printer powered on, hold down the *RESUME* button, confirm the specified number of beeps for the desired operation, and then release the *RESUME* button.

Beeps	Operations	Remarks
1	Cleaning	...
2	Nozzle check pattern printing	Prints one sheet and ends
3	No operation	...

1.5.1 Cleaning operation

If print output fades or blank lines appear on the output, check if the BJ head nozzles are clogged by printing the nozzle check pattern. If clogged, clean the cartridge to remove the stoppage.

With the printer powered on, hold down the *RESUME* button and, after confirming one beep, release the *RESUME* button. The cleaning operation will start. You can also clean the print head from the computer using the printer driver utilities. (*See Page 3-5*)

After cleaning, check that the nozzles have recovered by printing the nozzle check pattern again.

The cleaning operation cannot be performed when the scanner cartridge is installed.

1.5.2 Nozzle check pattern printing

With the printer powered on, hold down the *RESUME* button and, after confirming two beeps, release the *RESUME* button. The nozzle check pattern printing will start, feeding a sheet, which must be of A4 size, from the auto sheet feeder or manual paper feed slot.

If print defects are detected in the test print, perform BJ cartridge cleaning. If five or more cleaning operations fail to solve the problem, replace the BJ cartridge with a new one.

If you start the nozzle check pattern with the scanner cartridge installed, the BJ Cartridge Mis-installed Error will occur. (*See Page 3-2*) In this case, if you replace the scanner cartridge with the BJ cartridge, then the nozzle check pattern printing starts automatically.

Use paper of A4 size or larger for the nozzle check pattern printing. If you use smaller paper, the platen may be smeared with ink.

To abort the nozzle check pattern printing, press the *POWER* button. The printer will switch off after ejecting the paper.

1.5.3 Replacing the cartridge/ink tank

When you open the cover of the printer with powered on, the carriage moves to the cartridge replacement position (at the center of the printer). After replacing the BJ cartridge or ink tank, when you close the cover or leave it open for 10 minutes, then the carriage returns to the home position, at the right-most position, and starts cleaning operations. (The beeper will sound before cleaning starts.)

1) Replacing the BJ cartridge/scanner cartridge

Raise the cartridge lock lever, remove the BJ cartridge or scanner cartridge. When you install the scanner cartridge, keep the BJ cartridge, when removed from the printer, in the BJ cartridge container (supplied with the scanner cartridge).

2) Replacing the ink tank

You can replace the ink tanks without having to raise the cartridge lock lever. Since there are 6 separate ink tanks, one for each color, you can separately replace the ink tank that has become empty.

CAUTION

The BJ cartridge may be very hot immediately after continuous operation. If you open the printer cover when the cartridge is still hot, the carriage will not move to the replacement position until it has cooled, for safety purposes. In this case, leave the printer for several minutes and then reattempt replacement.

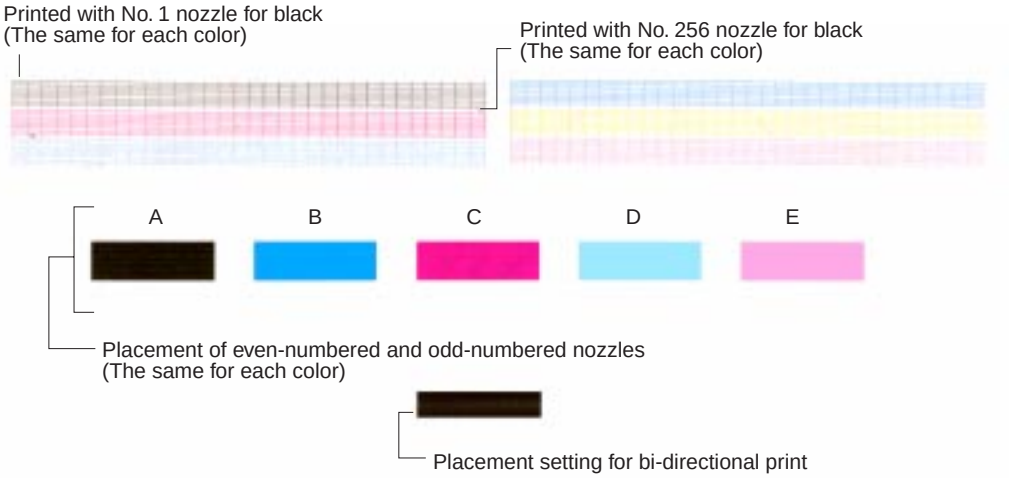

Figure 3-4 Nozzle Check Pattern Print

2. SERVICE MODE

This printer has a service mode for service-related settings or performing test printing. The operator panel buttons are used to enter *Service Mode*.

2.1 Service Mode Operations

1) With the printer powered off, while pressing the *RESUME* button, press and hold the *POWER* button. The beeper will sound once.
2) While holding down the *POWER* button, release the *RESUME* button. Press the *RESUME* button twice in succession, and then release both buttons. (Each time the *RESUME* button is pushed, the beeper will sound once.) The indicator will blink in green, and then light in green.
3) Select one of the following service mode functions by pressing the *RESUME* button the specified number of times. (Each time the *RESUME* button is pushed, the beeper will sound once.)

Times	Indicator	Functions
0	Lights in green	Power off the printer
1	Lights in orange	Service test print
2	Lights in green	EEPROM information print
3	Lights in orange	EEPROM reset (all data cleared except USB serial number)
4	Lights in green	Waste ink counter setting* (*see page 3-11*)
5	Lights in orange	Model setting* (*see page 3-12*)
6	Lights in green	Print head position pattern printing
7	Lights in orange	Print head position setting* (*see page 3-12*)
8	Lights in green	Roller cleaning
9	Lights in orange	Plain paper feeding/ejection after roller cleaning
10 or more	Blinks in orange	Return to service mode selection (return to the state when step (2) above is completed.)

Functions marked with "*": pressing the *POWER* button lets you select further sub-functions (refer to indicated pages).

4) Execute the function you have selected by pressing the *POWER* button. The beeper will sound once. (The printer will return to service mode selection mode after performing the function.)

2.2 Service Test Print

The service test print displays, in the header portion, such information as the control ROM version, model name, total sheets passed, and total waste ink absorbed, etc.

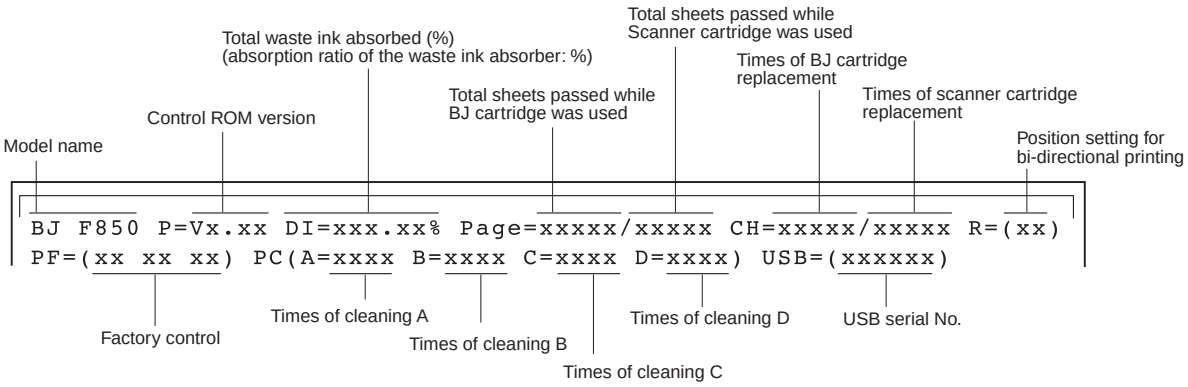

Figure 3-5 Service Test Print (Sample)

2.3 Printing EEPROM Information

The EEPROM stores such information as function settings, control ROM version, total number of sheets passed, total waste ink absorbed, and records the last user-unrecoverable error. The information stored in the EEPROM is printed out in the EEPROM information print. The same data as written in the service test print is written at the header. The EEPROM information is especially useful for determining how heavily the printer has been used.

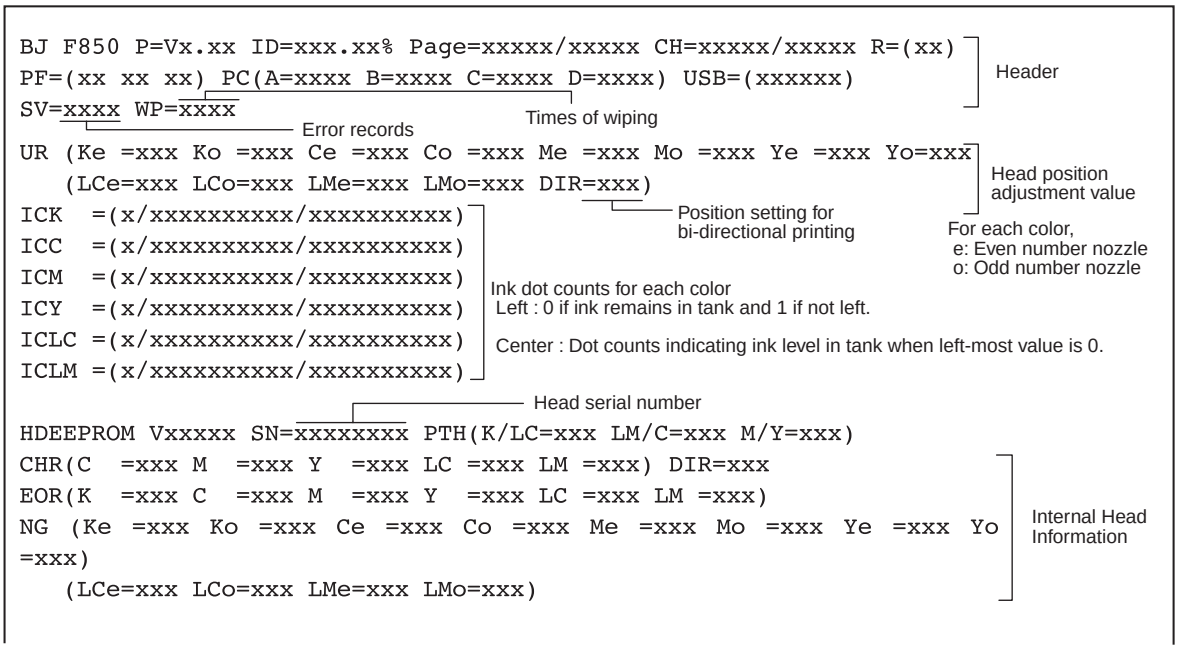

Figure 3-6 EEPROM Information Print (Sample)

The error record consists of the error code representing the most recent error that is not user-recoverable.

Error	Error code
Carriage error	5100
Purge error	5C00
ASF sensor error	5700
Temperature sensor error	5400
Waste ink full error	5B00
Head temperature error	5200
EEPROM error	6800
ROM error	6100
RAM error	6300
Other hardware error	6500

2.4 Resetting the EEPROM

The EEPROM stores such information as function settings, control ROM version, total number of sheets passed, total waste ink absorbed, and records of the last user-unrecoverable error. Once the EEPROM has been reset, there is no way to recover cleared data. Be careful when resetting the EEPROM.

Since the new EEPROM data is undefined, you must reset the EEPROM when replacing the logic board.

After the EEPROM is reset, you need to set the waste ink counter, adjust the head position, and verify the model name.

2.5 Setting the Waste Ink Counter

This printer detects the amount of waste ink based on the total EEPROM data - amount of waste ink absorbed. After the waste ink absorber is replaced, you must reset the data.

Before replacing the logic board, you should perform the service test print or the EEPROM information print to check in advance the total amount of waste ink in the absorber. If this is not possible, visually check the waste ink absorber and replace if necessary, or set the waste ink counter to 25%, 50%, and 75%. To determine which value the counter is to be set to, check how much ink has been absorbed by the absorber, as a percentage. Use *Figure 3-7* as a guide to determine the percentage. Note, however, that it depends on how the printer has actually been used.

To select the counter value, select "Waste ink setting" in *"2.1 Service Mode Operations"* and press the *POWER* button. Then, press the *RESUME* button the number of times listed below. (The beeper will sound each time the *RESUME* button is pressed.)

Times	Indicator	Functions
0	Lights in green	Waste ink counter cleared
1	Lights in orange	Waste ink counter set to 25%
2	Lights in green	Waste ink counter set to 50%
3	Lights in orange	Waste ink counter set to 75%
4 or more	Blinks in orange	No operation

After the selection, press the *POWER* button, and the counter will be set to the value selected, followed by a beep sound. (Also, the printer returns to the service function selection status.)

After setting the waste ink counter, verify the setting is made correctly by checking either the service test print or EEPROM information print.

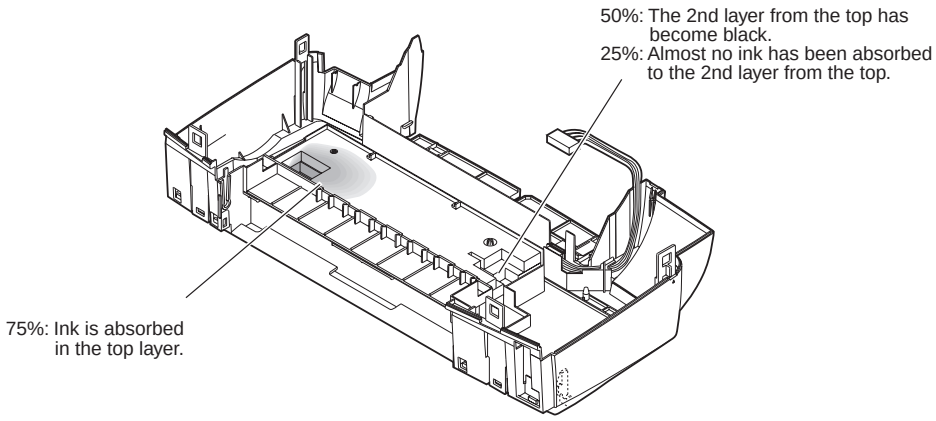

Figure 3-7 A Guide to Determine the Amount of Waste Ink Absorbed (Sample)

2.6 Setting the Model

Since the logic board of this model is also used for the Japanese model BJF850, you need to check the model name after resetting the EEPROM when replacing the logic board. The model name is normally set to BJC-8200 after resetting; if it is not, correct the name by the following method:

From the service selection mode, as shown in *Part 3: 2.1 "Service Mode Operations,"* select "Model setting" and press the *POWER* button. Then, press the *RESUME* button the number of times shown below. (Each time the *RESUME* button is pressed, the beeper will sound once.)

Times	Indicator	Function
0	Lights in green	BJF850
1	Lights in orange	BJC-8200
2 or more	Blinks in orange	No function

After making the selection, press the *POWER* button, and the EEPROM will be set to the model selected, followed by a beep sound. (The printer will return to the service function selection status.)

After setting the model name, verify the setting is correct by checking either the service test print or EEPROM information print.

2.7 Adjusting the Head Position

You can adjust the head position without connecting the printer to a computer. Among the head position adjustments that users can perform using the printer driver utilities, only the bi-directional printing adjustment is carried out.

After adjusting the position, verify the adjustment is made correctly by conducting a service test print or EEPROM information print.

Use High-Resolution Paper (HR-101) or Glossy Photo Paper (GP-301), which provide higher quality printing.

Adjust the head position in the following procedure:

1) From the service function selection status in *Part 3: 2.1 "Service Mode Operations,"* select "Print head position pattern printing" and press the *POWER* button.
2) The printer starts to print the head position adjustment pattern. (See *Figure 3-8 Head Position Adjustment Pattern (Sample)*)
   After the printing, the printer will return to service function selection status.
3) Press the *RESUME* button 7 times to enter the print head position setting mode and press the *POWER* button.
4) Determine which value is the best for the head by checking the printed pattern, and then press the *RESUME* button the number of times listed below to set the head adjustment value accordingly. (Each time the *RESUME* button is pressed, the beeper will sound once.)

Times	Indicator	Function
0	Lights in green	Sets head adjustment value to 0
1	Lights in orange	Sets head adjustment value to -1
2	Lights in green	Sets head adjustment value to +1
3	Lights in orange	Sets head adjustment value to -2
4	Lights in green	Sets head adjustment value to +2
5	Lights in orange	Sets head adjustment value to -3
6	Lights in green	Sets head adjustment value to +3
7 or more	Blinks in orange	No function

After making the selection, press the *POWER* button, and the beeper will sound once, and the head position adjustment value will be set to the value you have input.

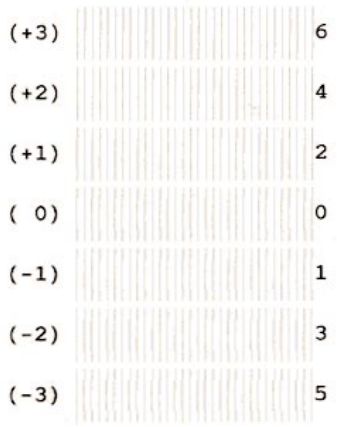

Figure 3-8 Head Position Adjustment Pattern (Sample)

2.8 Roller Cleaning

If surface-processed paper or High-Resolution Paper (HR-101) has been used in quantity, paper feeding performance may decline due to paper dust adhering to the pick-up roller. If this happens, clean the pick-up roller using the cleaning plate supplied with the printer.

Clean the roller in the following procedure:

1) Dampen the white cleaner on the cleaning plate with adequate water and set the plate into the automatic feeder.
2) From the service function selection status as shown in *Part 3: 2.1 "Service Mode Operations,"* select "Roller cleaning" and press the *POWER* button.
3) The pick-up roller will rotate 20 times.
   (The printer returns to service function selection status)
4) Insert a sheet of plain paper into the printer, with the cleaning plate set. The paper should be inserted all the way until the front edge of the paper contacts the inside of the printer.
5) Press the *RESUME* button 9 times to select "Plain paper feeding/ejection after roller cleaning" and press the *POWER* button to perform the paper feeding/ejection.
6) Carry out steps 4) and 5) once again.
7) Remove the cleaning plate and wipe the white cleaner with a dry cloth to remove water.

NOTE

If feeding operations do not recover to normal after the procedure above, carry out step 2) another two or three times.
The cleaning plate is re-usable; you can use it repeatedly until it loses its' intended effect.
You can also perform roller cleaning with the printer driver utilities. (*See Page 3-5*)

This page intentionally left blank

Part 4

TROUBLE SHOOTING

Page

4 - 1 1. TROUBLESHOOTING BY DISPLAYED ERRORS
4 - 1 1.1 Initial Flowchart
4 - 4 1.2 Error List (Indicator/Beeper/Error Code)
4 - 5 1.3 Troubleshooting by Errors
4 -14 2. TROUBLESHOOTING BY SYMPTOMS
4 -14 2.1 Troubleshooting by Symptoms

1. TROUBLESHOOTING BY DISPLAYED ERRORS

1.1 Initial Flowchart

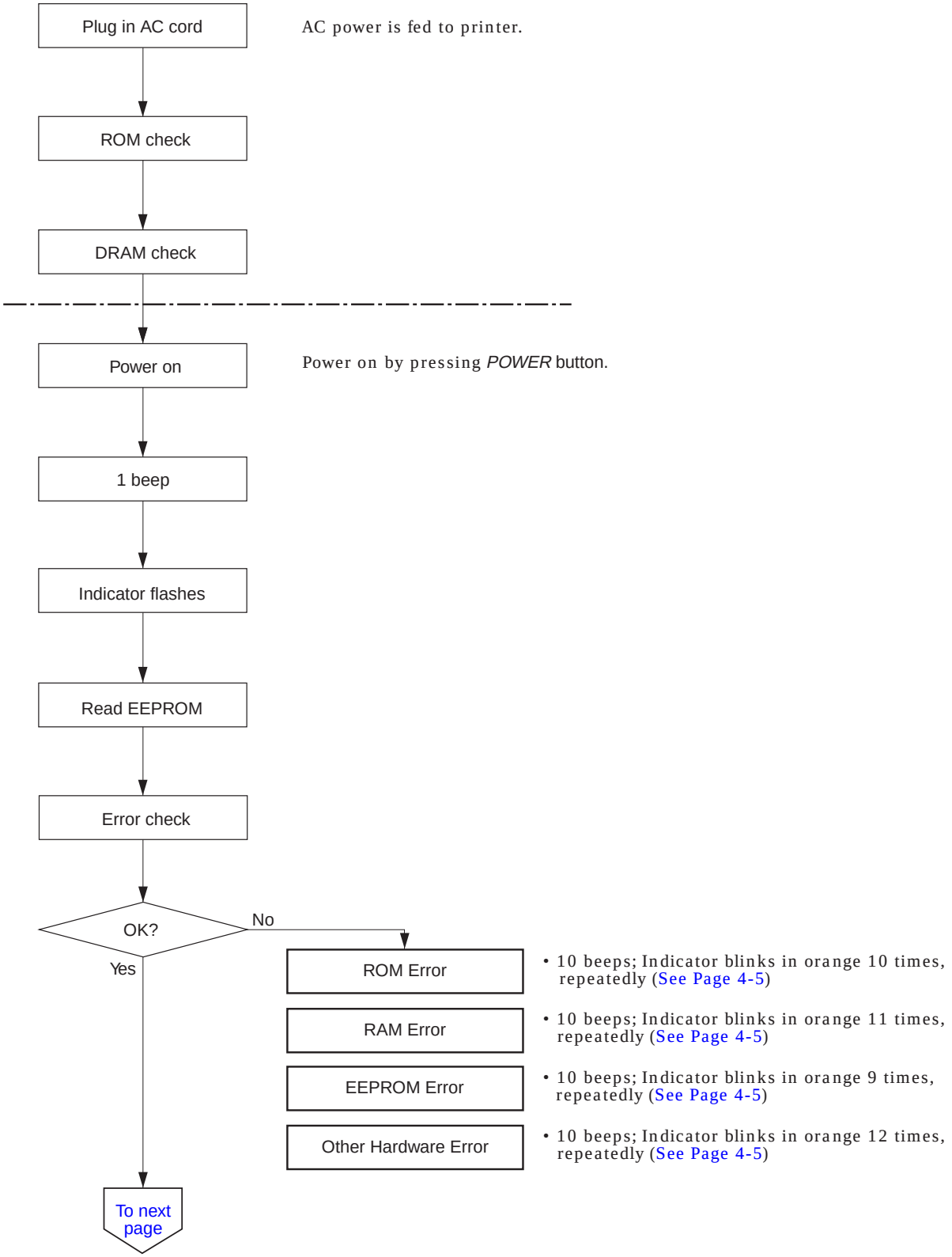

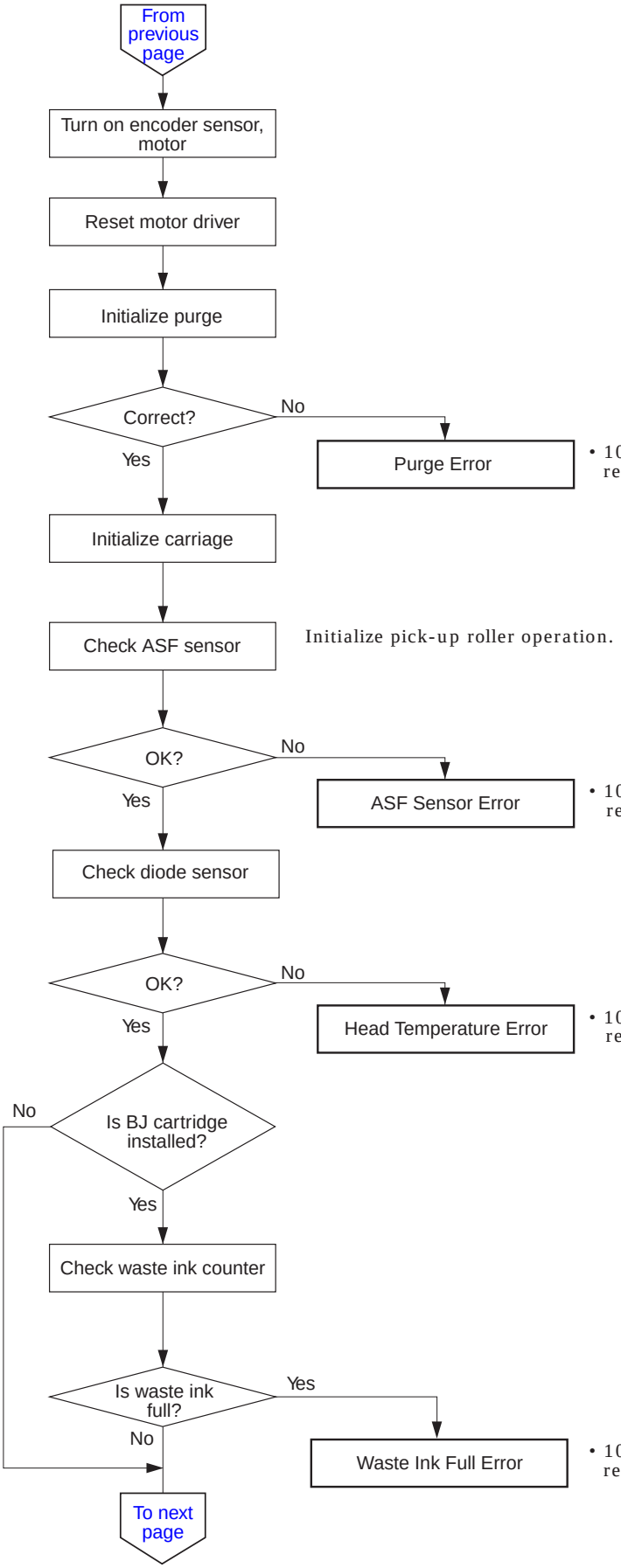

• 10 beeps; Indicator blinks in orange 4 times, repeatedly (See Page 4-7)

• 10 beeps; Indicator blinks in orange 5 times, repeatedly (See Page 4-8)

• 10 beeps; Indicator blinks in orange 8 times, repeatedly (See Page 4-10)

• 10 beeps; Indicator blinks in orange 7 times, repeatedly (See Page 4-9)

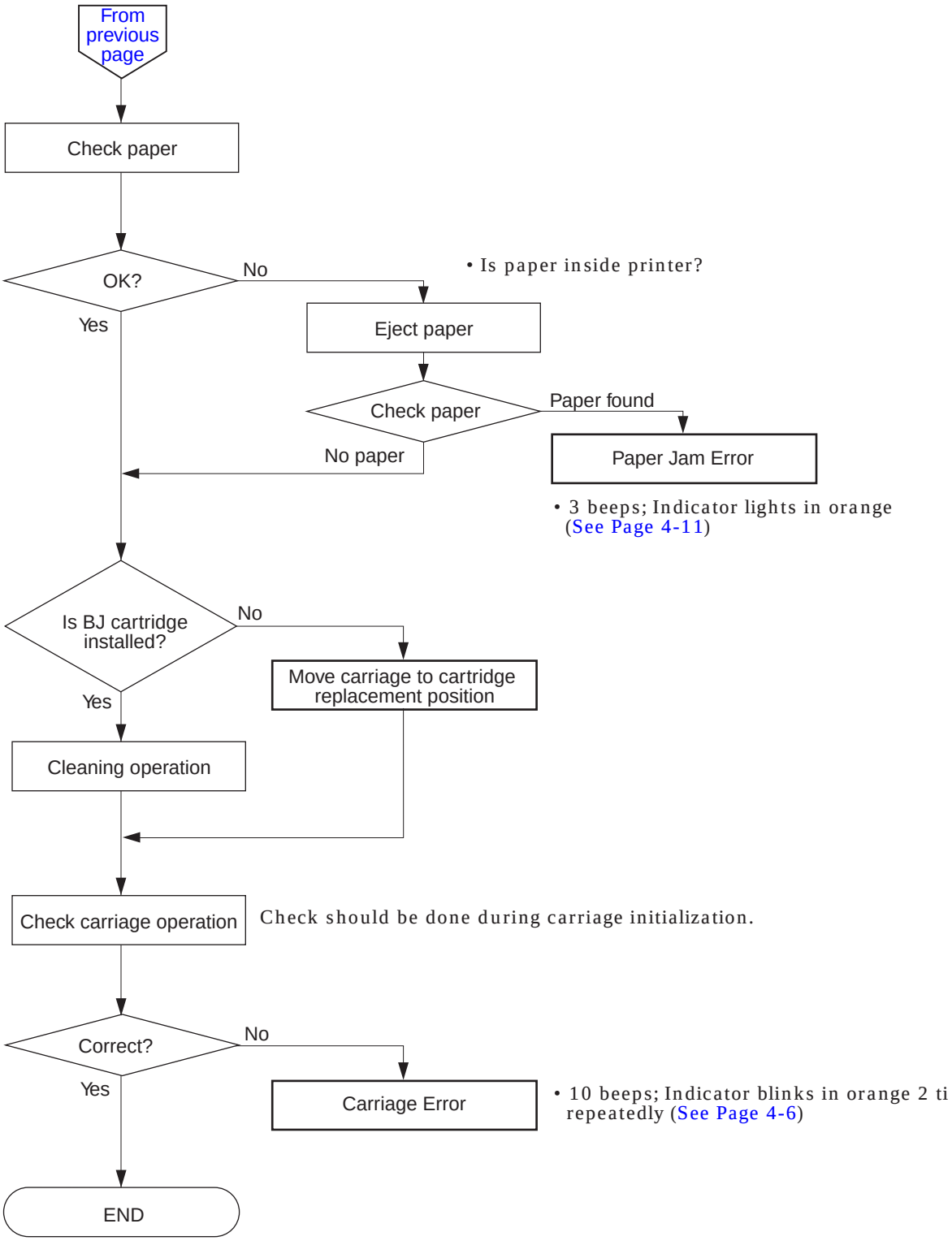
From previous page
Check paper
OK?
No
Yes
• Is paper inside printer?
Eject paper
Check paper
Paper found
No paper
Paper Jam Error
• 3 beeps; Indicator lights in orange
(See Page 4-11)
Is BJ cartridge installed?
No
Yes
Move carriage to cartridge replacement position
Cleaning operation
Check carriage operation
Check should be done during carriage initialization.
Correct?
No
Yes
Carriage Error
• 10 beeps; Indicator blinks in orange 2 ti
repeatedly (See Page 4-6)
END

1.2 Error List (Indicator/Beeper/Error Code)

TABLE 4-1 ERROR DISPLAY

Errors	Indicator	Beeps	Error code	Reference page
[Recoverable by users]				
Paper feed error	Lights in Orange	2 times		Page 4-11
Paper jam error	Lights in Orange	3 times		Page 4-11
Ink out error	Lights in Orange	4 times		Page 4-12
BJ Cartridge not-installed error	Lights in Orange	5 times		Page 4-13
BJ cartridge mis-installed error	Lights in Orange	6 times		Page 4-13
BJ Cartridge error	Lights in Orange	7 times		Page 4-13
Waste ink full warning	Lights in Orange	8 times		Page 4-9
[Unrecoverable by users]				
Carriage error	Blinks in Orange 2 times	10 times	5100*	Page 4-6
Purge error	Blinks in Orange 4 times	10 times	5C00*	Page 4-7
ASF sensor error	Blinks in Orange 5 times	10 times	5700*	Page 4-8
Temperature sensor error	Blinks in Orange 6 times	10 times	5400*	Page 4-5
Waste ink full error	Blinks in Orange 7 times	10 times	5B00*	Page 4-9
Head temperature error	Blinks in Orange 8 times	10 times	5200*	Page 4-10
EEPROM error	Blinks in Orange 9 times	10 times	6800*	Page 4-5
ROM error	Blinks in Orange 10 times	10 times	6100*	Page 4-5
RAM error	Blinks in Orange 11 times	10 times	6300*	Page 4-5
Other hardware error	Blinks in Orange 12 times	10 times	6500*	Page 4-5
[Other warning]				
Ink-low warning	No indication (To be reported to host)	None		
Head temperature warning	No indication (To be reported to host)	None		

* See Page 3-10

1.3 Troubleshooting by Errors

1. ROM Error

<Cause> ROM cannot be read during initialization.
<Suspected parts> Control ROM
<Measure> Replace ROM and logic board.

2. RAM Error

<Cause> RAM cannot be read or written.
<Suspected parts> ASIC
<Measure> Replace ASIC and logic board.

3. EEPROM Error

<Cause> EEPROM cannot be written correctly.
<Suspected parts> EEPROM, CPU
<Measure> Replace EEPROM, CPU, and logic board.

4. Other Hardware Error

<Cause> Internal processing on logic board is not performed correctly.
<Suspected parts> EEPROM, CPU
<Measure> Replace CPU, ASIC, and logic board.

Error indications may fail if error occurs with ROM, RAM, or other hardware.

5. Temperature Sensor Error

<Cause> The thermistor is defective.
<Suspected parts> Thermistor
<Measure> Replace the logic board.

6. Carriage Error

<Cause> Carriage cannot be controlled correctly
<Suspected parts> Carriage motor, logic board, carriage ribbon cable, carriage board, carriage belt, idler pulley, encoder film.

<Measure>

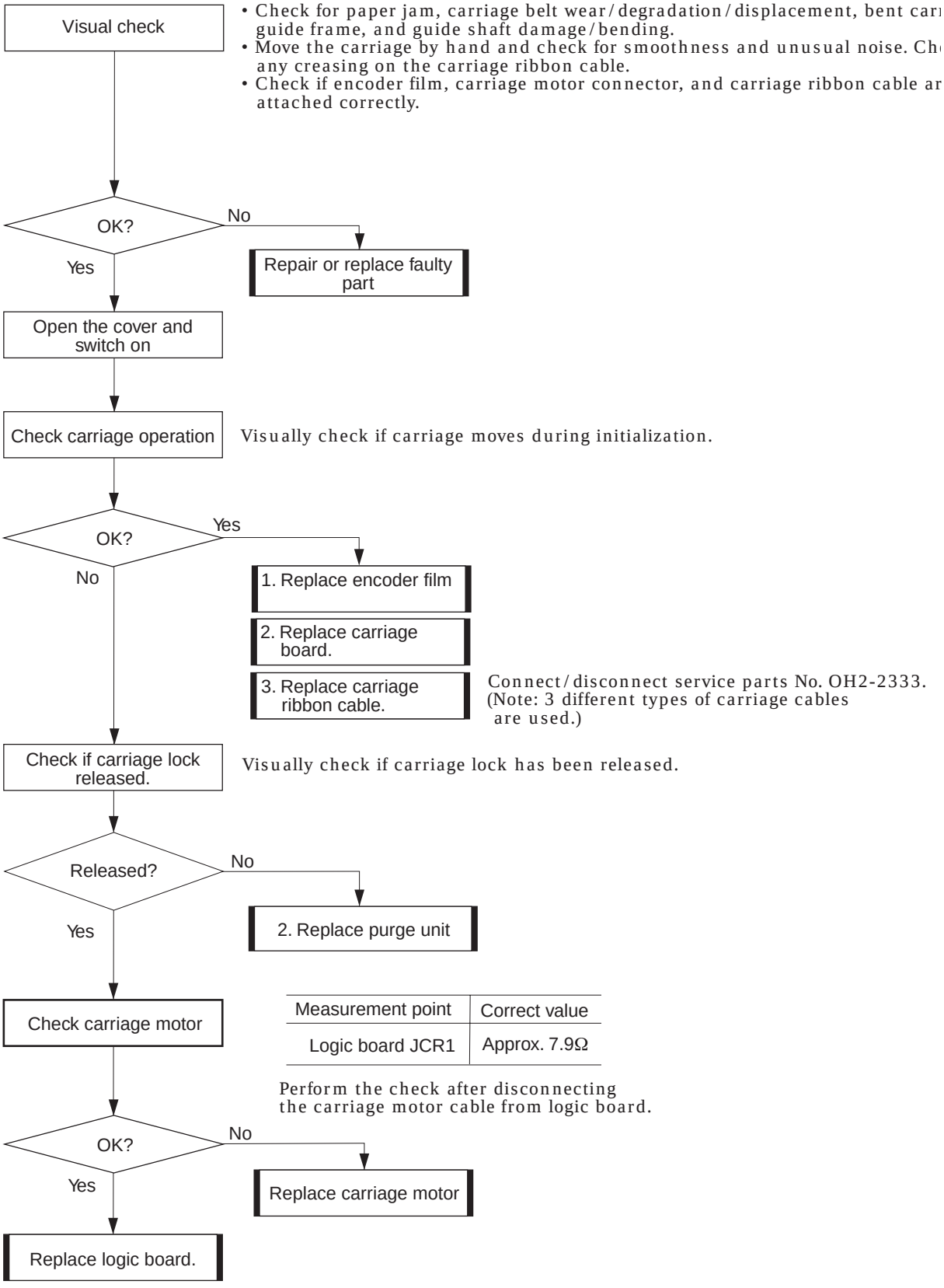

7. Purge Error

<Cause> Cleaning or capping is not performed correctly, or purge sensor cannot detect flag position.

<Suspected parts> Purge unit, logic board, AC adapter, DC cable.

<Measure>

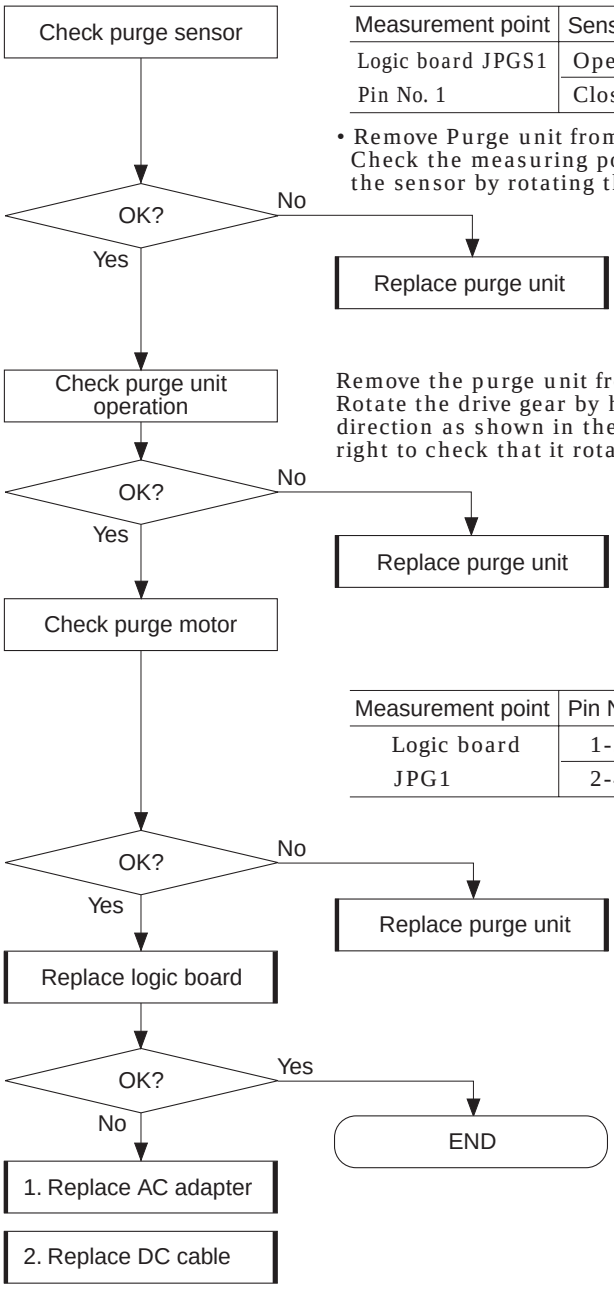

Measurement point	Sensor	Normal value
Logic board JPGS1 Pin No. 1	Open	Low level
	Close	High level

• Remove Purge unit from main unit and turn it on. Check the measuring points while opening/closing the sensor by rotating the drive gear by hand.

Remove the purge unit from main unit. Rotate the drive gear by hand in the direction as shown in the figure to the right to check that it rotates smoothly.

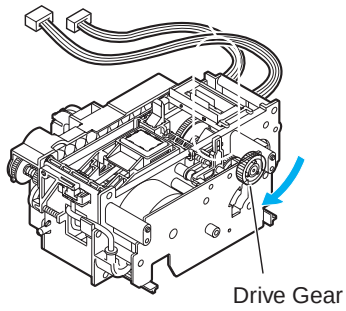

Purge Unit

Measurement point	Pin No.	Normal value
Logic board JPG1	1-3	Approx. 10Ω
	2-4	

8. ASF Sensor Error

<Cause> Pick-up roller flag cannot be detected.
<Suspected parts> ASF unit, logic board, purge unit.

<Measure>

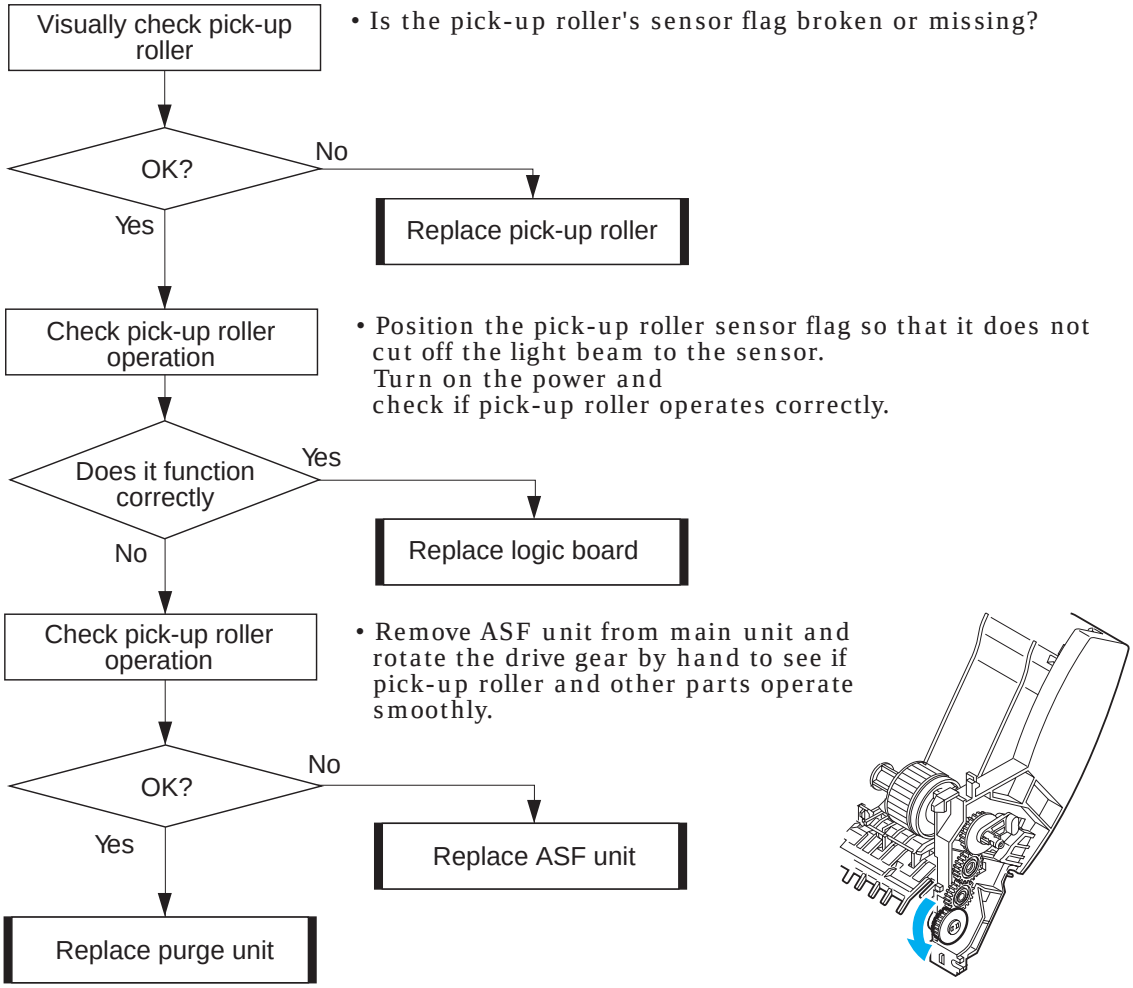

9. Waste Ink Full Warning/Error

<Cause> The calculated amount of waste ink absorbed is 100% or 95% of the capacity of the waste ink absorber.

<Suspected parts> Waste ink absorber, logic board, EEPROM

<Measure>

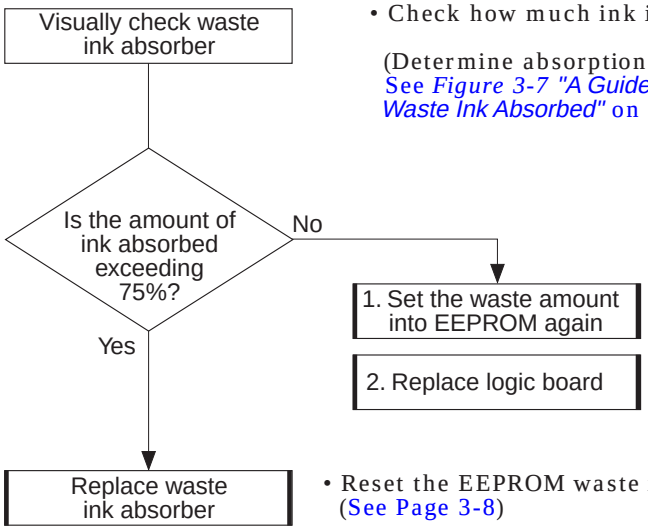

• Check how much ink is absorbed in waste ink absorber.

(Determine absorption ratio of the waste ink absorber in %.)
See *Figure 3-7 "A Guide to Determine the Amount of Waste Ink Absorbed"* on Page 3-11.

0% (Clear), 25%, 50%, and 75%
See *Part 3: 2.1 Service Mode Operations*

• Reset the EEPROM waste ink counter.
(See Page 3-8)

10. Head Temperature Error

<Cause> The print head is too hot.
<Suspected parts> BJ cartridge, logic board, empty ink tank.

<Measure>

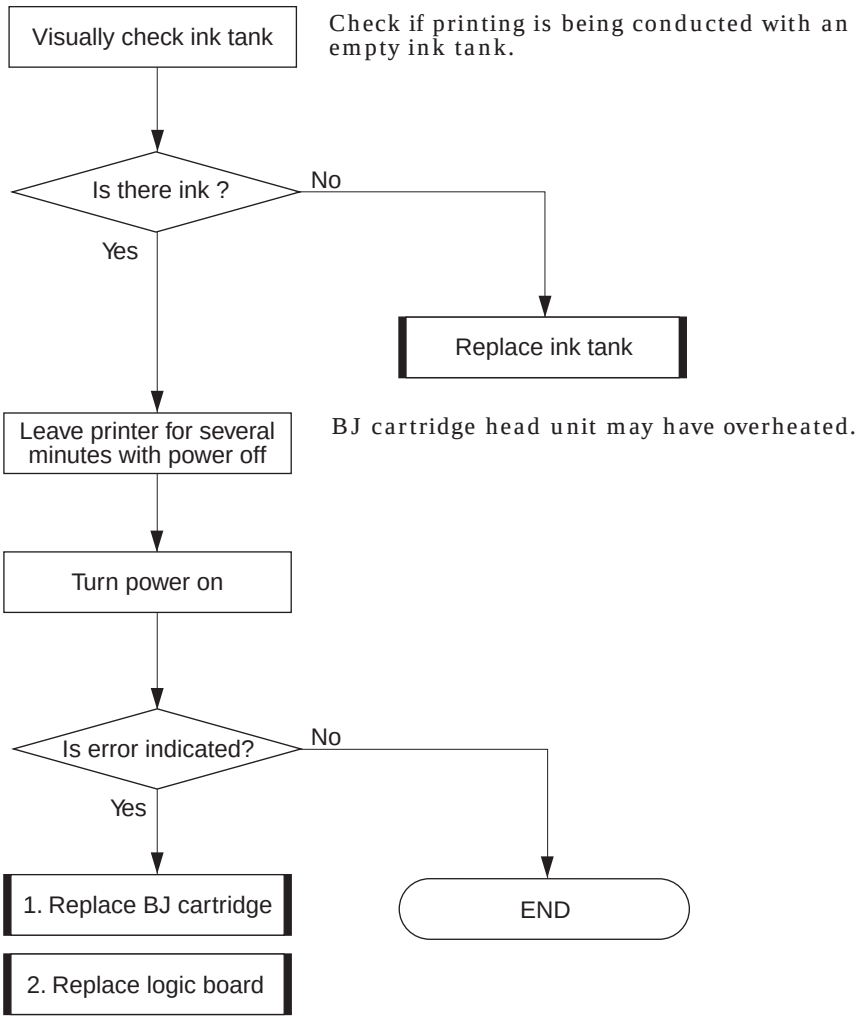

11. Paper Feed Error/Paper Jam Error

<Cause> Paper feed operation fails to feed paper. Paper eject operation fails to eject paper.

<Suspected parts> Paper feed section, paper end sensor, logic board

<Measure>

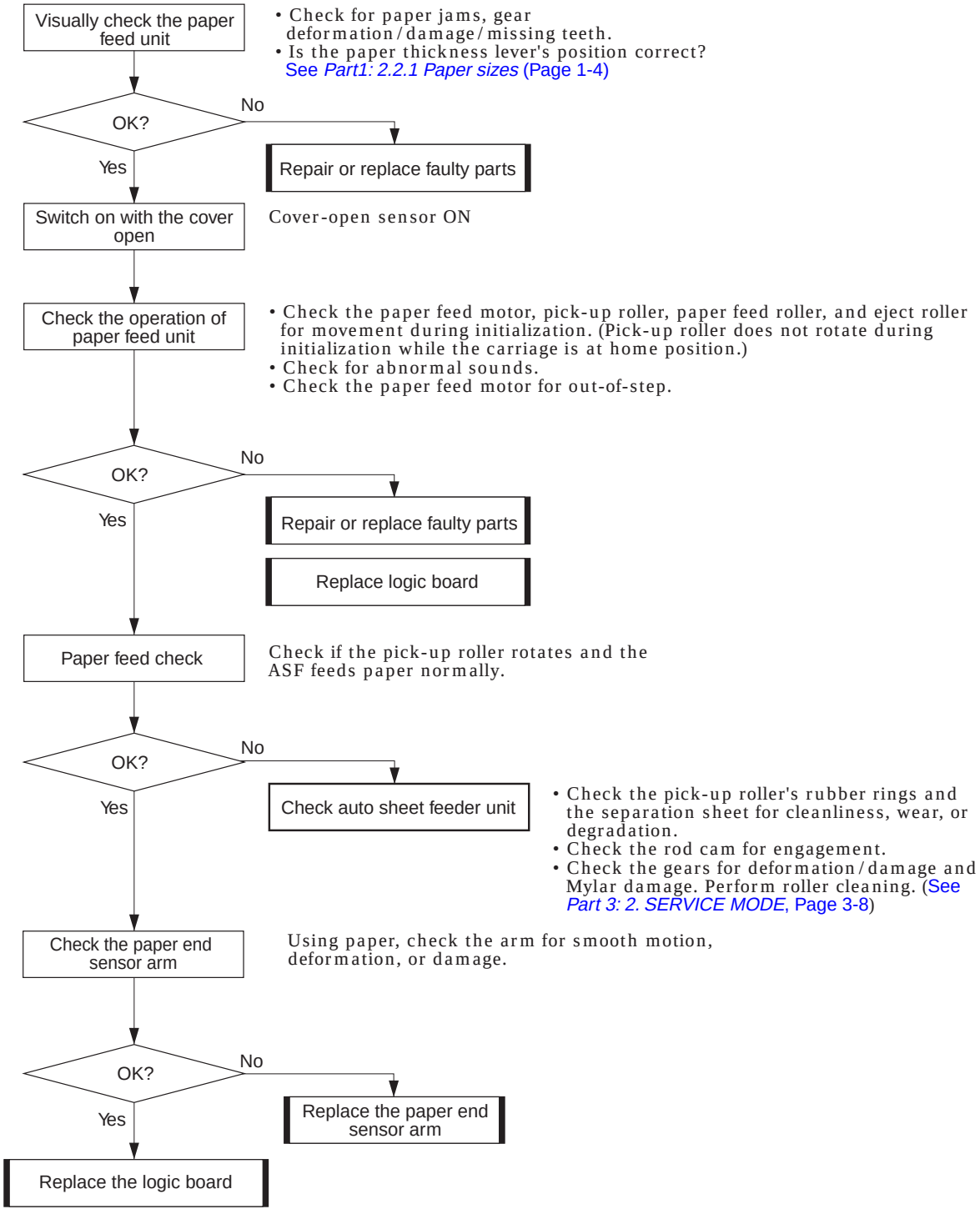

12. Ink Out Error

<Cause> The ink tank is empty. EEPROM is defective.
<Suspected parts> Ink tank, EEPROM, logic board.

<Measure>

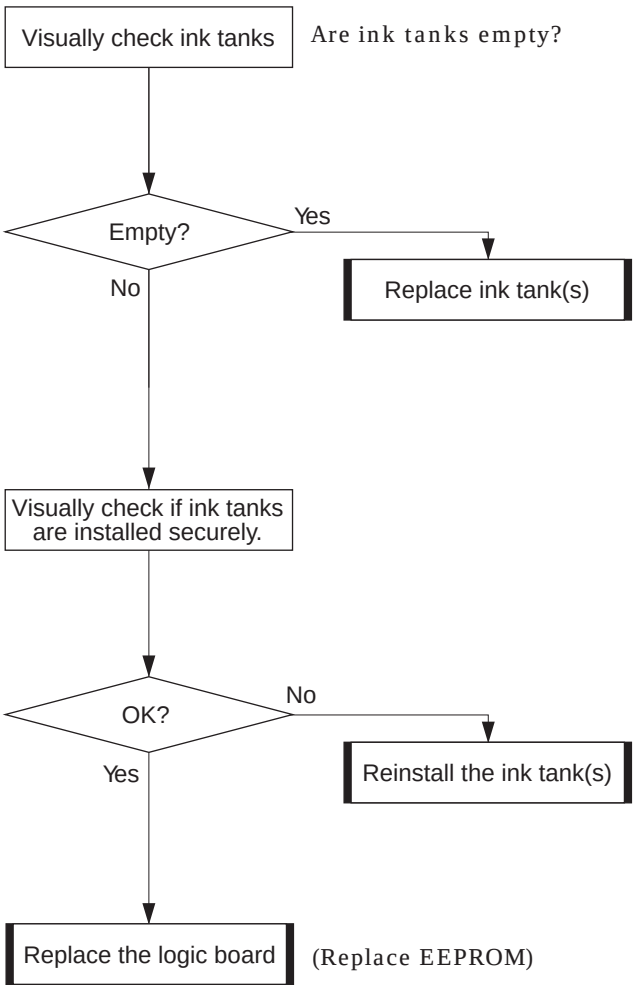

13. BJ Cartridge Error/Mis-installed Error/Not-installed Error

<Cause>
- BJ cartridge not detected.
- BJ cartridge not installed.
- BJ cartridge combination wrong.

<Suspected parts> BJ cartridge (scanner cartridge), carriage board, logic board, carriage ribbon cable, carriage unit
Poor contact in cartridge
Wrong use of cartridge

<Measure>

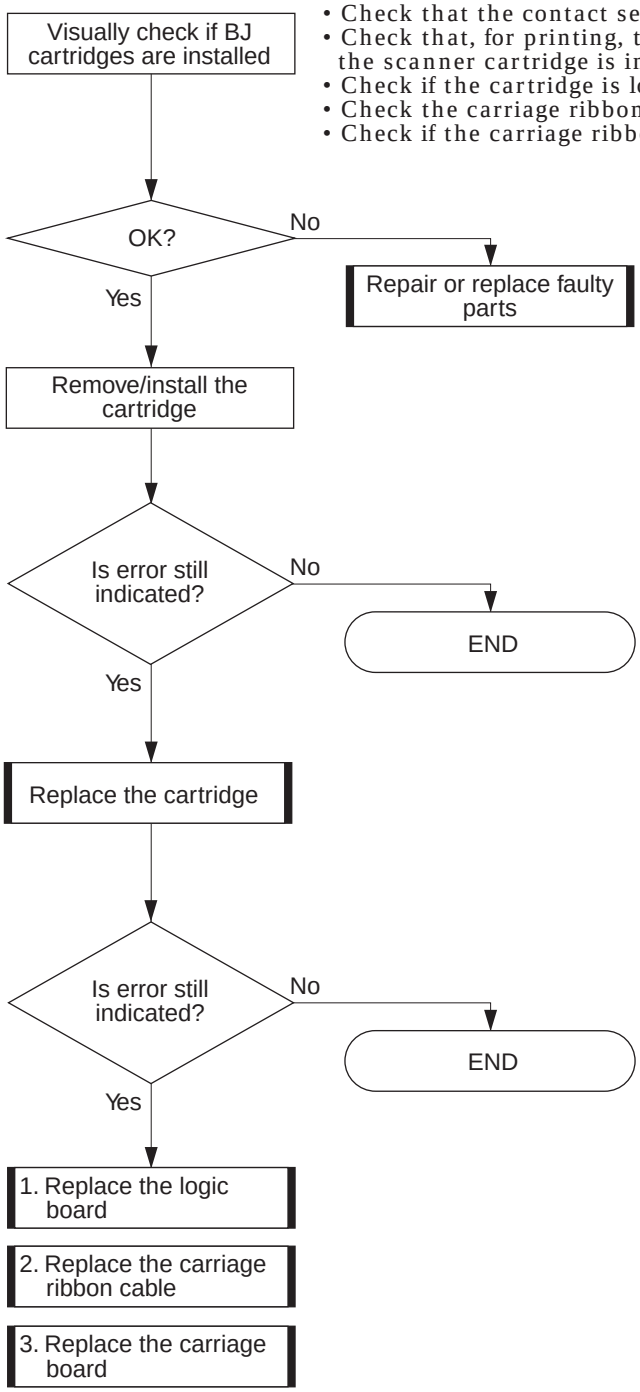

2. TROUBLESHOOTING BY SYMPTOMS

2.1 Troubleshooting by Symptoms

1. Power Does Not Turn On

<Symptoms> Pressing the *POWER* button fails to switch on the printer.
Pressing the *POWER* button does not start initialization.

<Cause> Defective AC adapter, logic board, or DC cable

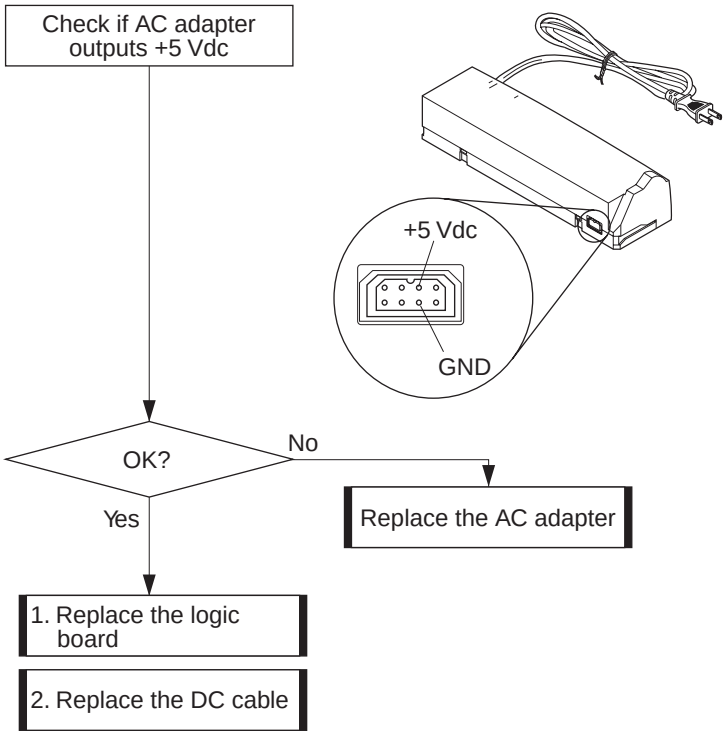

2. Faulty Printing: No Printing

<Symptoms> No prints; Partial prints; No prints for specific colors

<Cause> The ink tank(s), BJ cartridge, or purge unit is defective; the orange cap is affixed to the head unit.

<Measure>

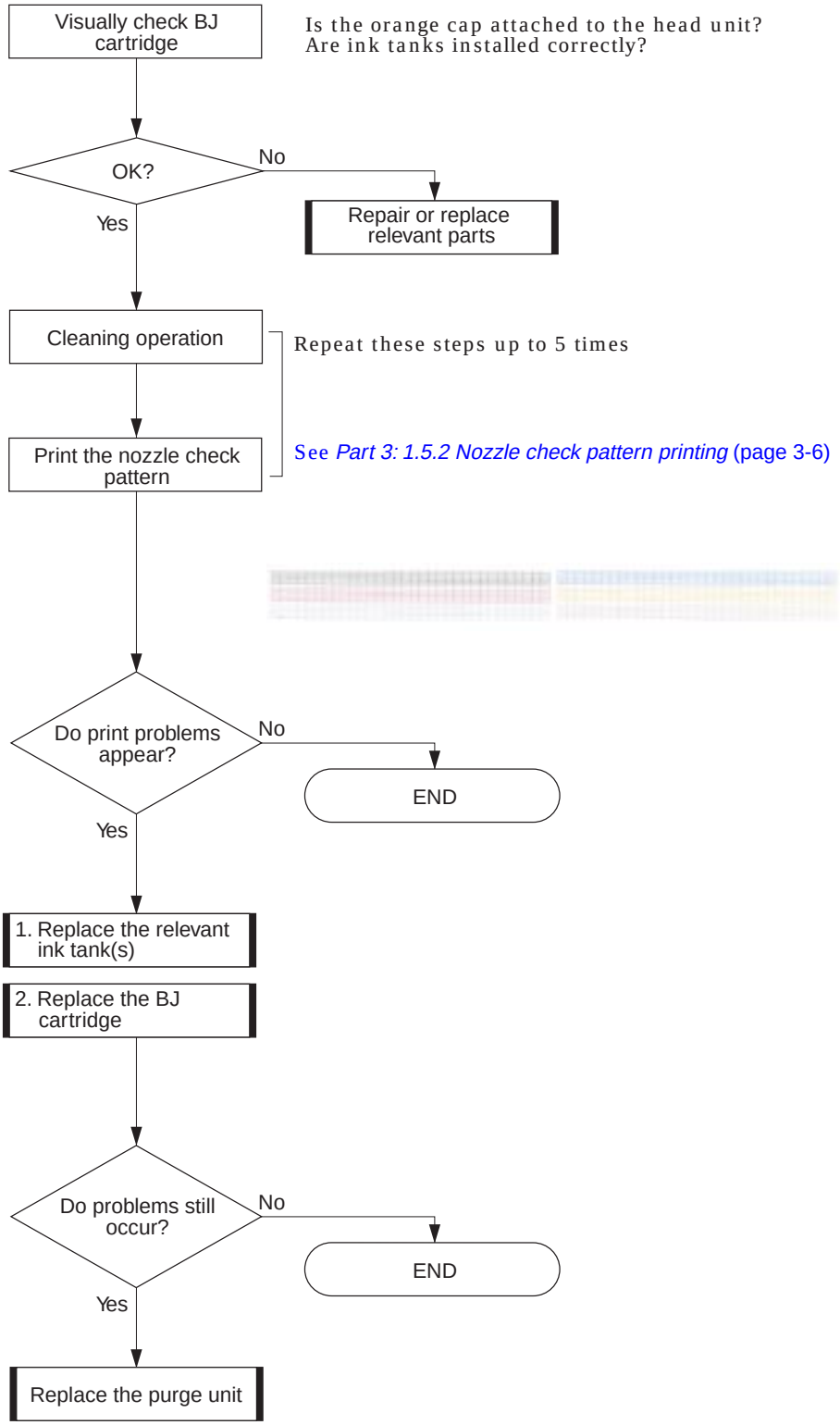

3. Faulty Printing: Blank Lines Appear

<Symptoms> Blurred prints; Blank lines; Specific dot missing
<Cause> The BJ cartridge; BJ cartridge contacts; carriage ribbon cable; purge unit; logic board or carriage board is faulty.

<Measure>

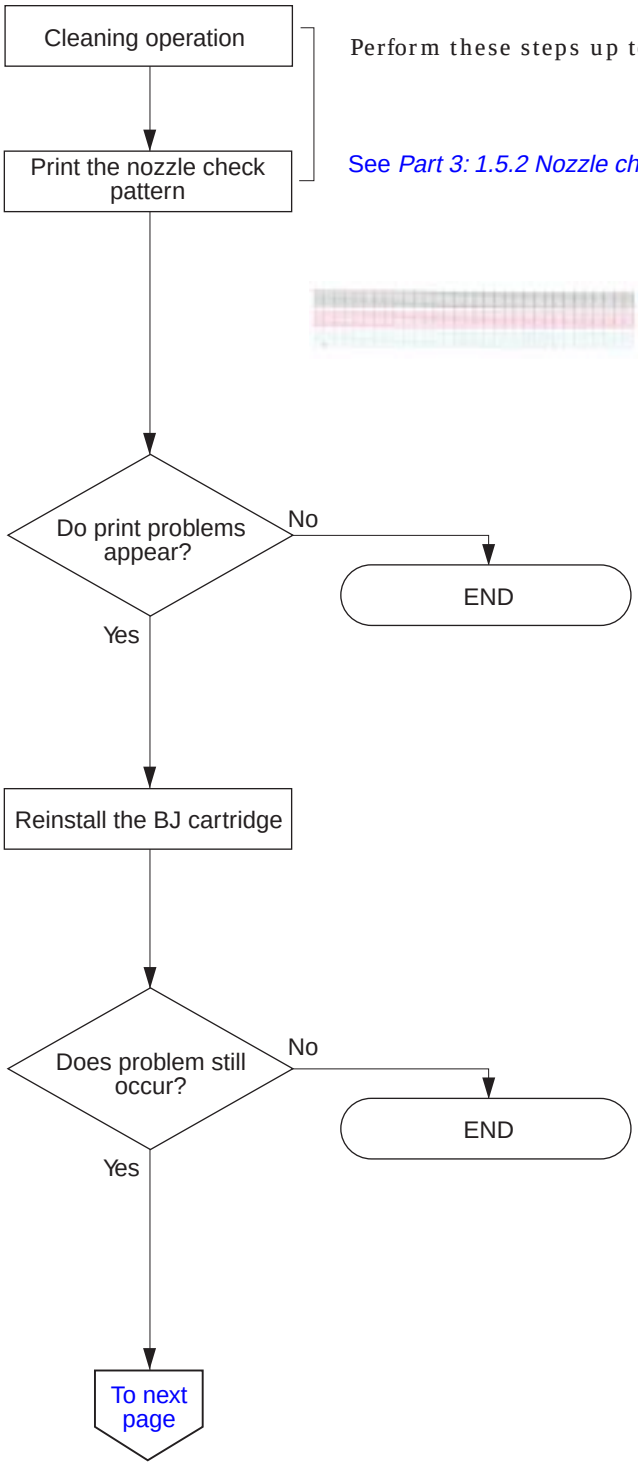

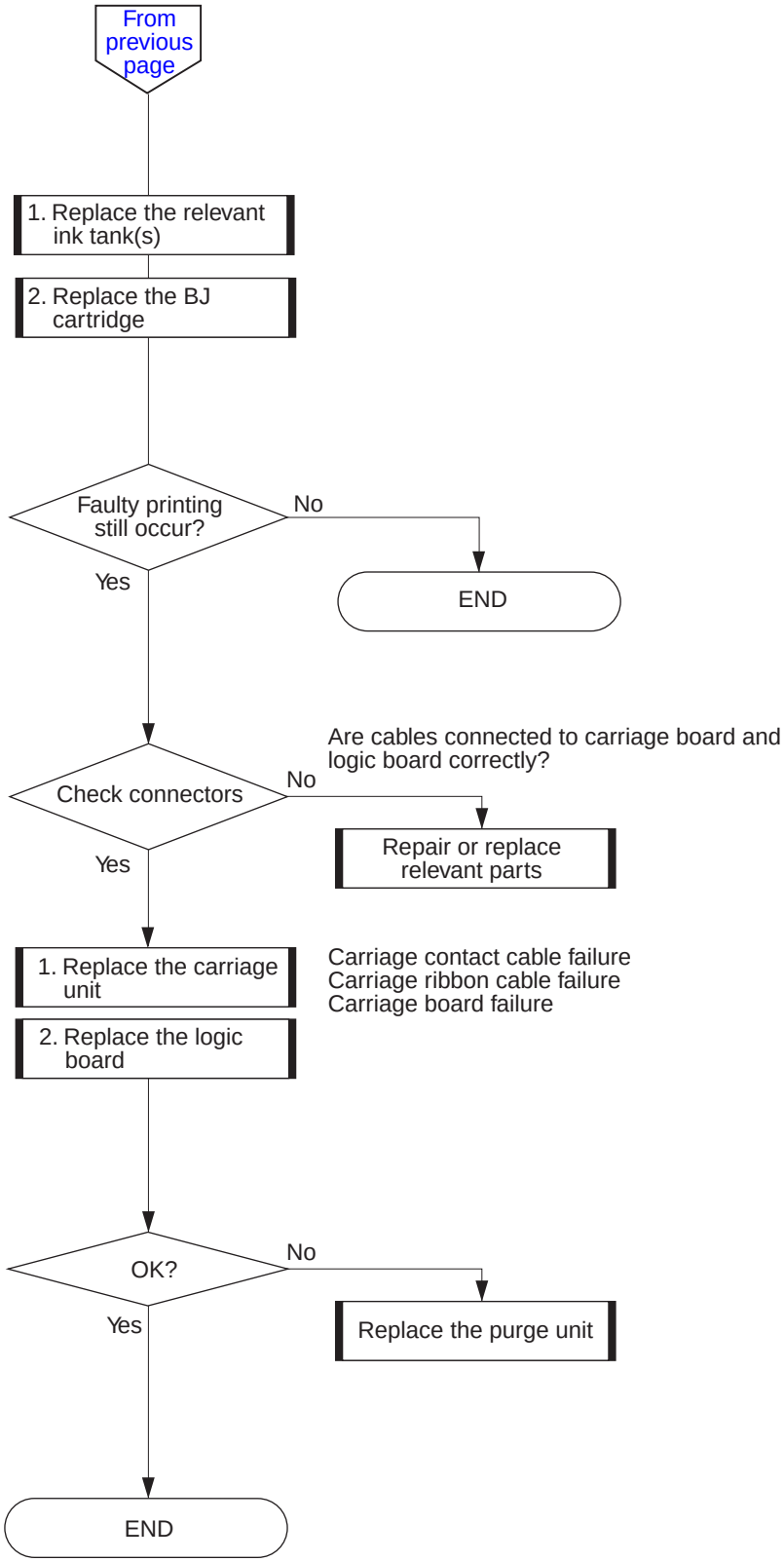
From previous page
1. Replace the relevant ink tank(s)
2. Replace the BJ cartridge
Faulty printing still occur?
No
Yes
END
Are cables connected to carriage board and logic board correctly?
Check connectors
No
Yes
Repair or replace relevant parts
1. Replace the carriage unit
2. Replace the logic board
Carriage contact cable failure
Carriage ribbon cable failure
Carriage board failure
OK?
No
Yes
Replace the purge unit
END

4. Faulty Printing: Other

Symptoms	Check to see if	Measure
Paper gets dirty	The platen is contaminated with ink mist.	Wipe with a damp cloth.
	The paper feed unit is contaminated with ink (paper is contaminated before reaching the platen).	Disassemble the paper feed unit and wipe with a damp cloth. Perform paper feeding test several times.
Spur marks appear	The tips of the spurs are deformed.	Replace the spur unit.
Vertical misalignment	The paper thickness lever is wrongly set. (positioned incorrectly)	Correct the setting. (See Page 1-4)
		Readjust the head position. (See Page 3-5)
	The printed nozzle check pattern is mis-aligned.	Replace the BJ cartridge
	How grease is applied to guide shaft	Apply specified amount of grease to specified portions.
	Carriage motor condition	Replace carriage motor with new one.
	The encoder film is attached. Are there scratches/foreign material/grease?	Replace encoder film.

5. Ink Out Resulting in No Error

<Symptoms> Ink out results in no error.
<Cause> The ink tank is incorrectly, or not installed or the logic board or ink sensor is defective.

<Measure>

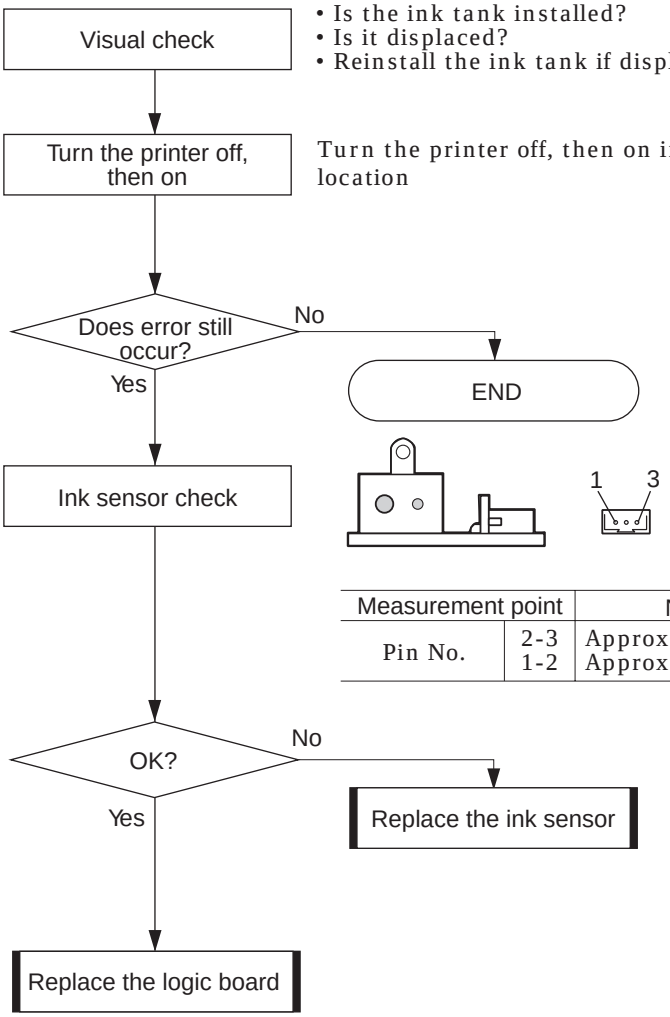

Measurement point		Normal value
Pin No.	2-3	Approx. 1.2V
	1-2	Approx. 0V (Infinite resistance)

This page intentionally left blank

Part 5

REFERENCE

Page

5 - 1 1. TECHNICAL REFERENCE
5 - 1 1.1 Functions of the Paper Feed Unit
5 - 2 1.2 Carriage Function
5 - 3 1.3 Purge Unit Functions
5 - 4 1.4 BJ Cartridge
5 - 5 1.5 Detection With Sensors
5 - 6 2. CONNECTOR POSITIONS AND PIN ASSIGNMENT
5 - 6 2.1 Logic Board
5 -10 2.2 Carriage Board
5 -13 2.3 BJ Cartridge
5 -14 2.4 Scanner Cartridge
5 -15 2.5 AC Adapter
5 -15 2.6 DC Power Cable
5 -16 2.7 Carriage Motor
5 -16 2.8 Paper Feed Motor
5 -16 2.9 Purge Motor
5 -17 2.10 Ink Sensor
5 -17 2.11 Paper Thickness Sensor
5 -17 2.12 Purge Sensor
5 -18 3. CIRCUIT DIAGRAM
5 -18 3.1 Parts Layout
5 -21 3.2 Circuit Diagrams

1. TECHNICAL REFERENCE

1.1 Functions of the Paper Feed Unit

This printer supports 2 paper feeding methods: automatic feeding from the Auto Sheet Feeder (ASF) and manual feeding from the manual paper-feed slot. The ASF, driven by the paper feed motor, feeds paper automatically.

Manual feeding takes precedence over automatic feeding; you can feed paper manually even when paper is set in the ASF.

When paper is detected by the photo-interrupter type paper end sensor, it is fed to the print start position on the platen via the paper feed rollers.

Although paper has been fed by the pick-up roller, if it cannot be detected by the paper end sensor, an auxiliary function of this printer reattempts feeding. If the paper still cannot be detected, a paper feed error will occur.

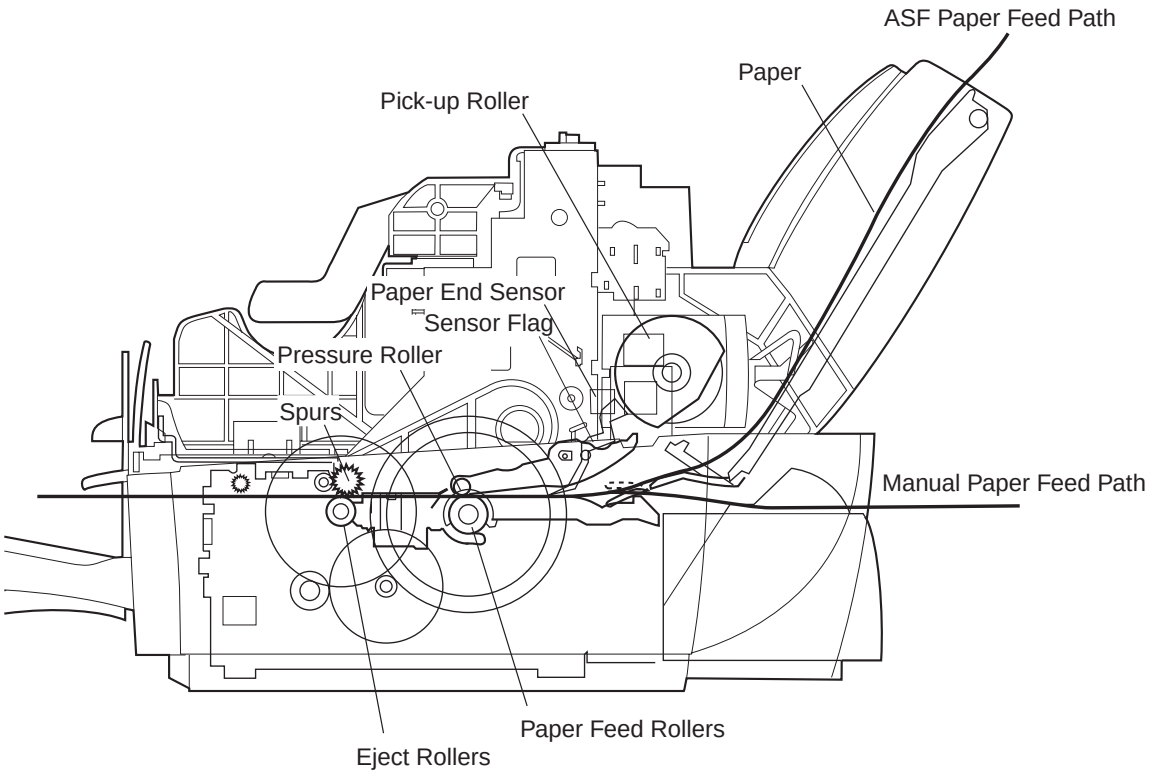

Figure 5-1 Paper Feed Path

1.2 Carriage Function

The carriage of this printer is moved back and forth horizontally by the carriage belt, which is driven by the carriage motor, a DC motor.

This printer has no sensor to detect the carriage's home position. The encoder sensor, mounted on the carriage board, enables control of the carriage position by reading data from the encoder film, assuming the initial position being where the carriage contacts the right hand interior wall of the printer.

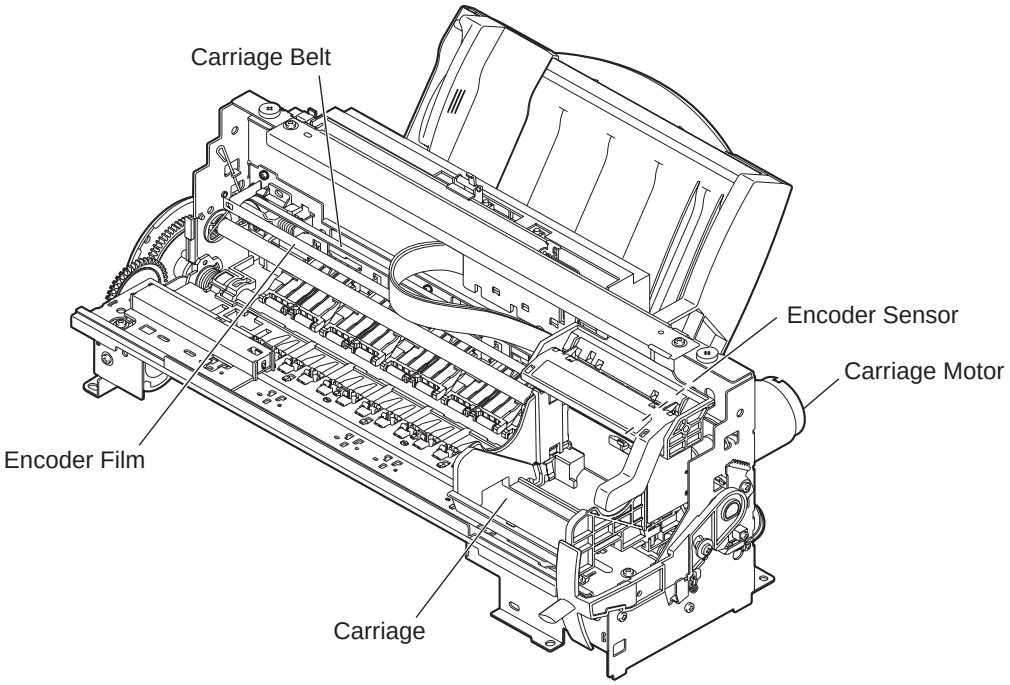

Figure 5-2 Carriage Unit

1.3 Purge Unit Functions

The purge unit, using the built-in purge motor, carries out the following operations: head-capping, head-wiping, ink-suction, and ASF-driving. The purge unit switches over the drive for these operations by reversing the direction of motor rotation, and also by using the drive selector lever.

If the purge motor rotates in the forward direction while the carriage is at the capping position, head-capping and head-wiping are carried out. In this case, the wiper moves in the direction in which nozzles are placed. If the purge motor rotates in the reverse direction while the head is capped, ink-suction is carried out. For the suction operation, a pump with a tube is used.

To drive the ASF, the carriage moves to the left, passing the capping position and rotates the purge motor in the reverse direction.

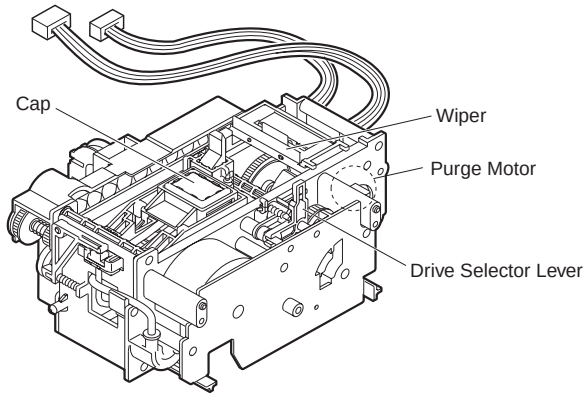

Figure 5-3 Purge Unit

TABLE 5-1 AMOUNTS OF INK USED DURING CLEANING (GUIDE)

Cleaning conditions	Amount of ink used for reference
When power is turned on for the first time after the AC plug is connected (capped)	Approx. 0.56 cc
When power is turned on for the first time after the AC plug is connected (uncapped)	Approx. 1.30 cc
The number of dots printed has exceeded the predefined value.	Approx. 0.56 cc
When power is turned on or printing is started after 120 hours or more from the previous cleaning.	Approx. 0.56 cc
When cleaning is started by the *RESUME* button.	Approx. 0.74 cc
When the BJ cartridge is replaced (including when the printer is used for the first time.)	Approx. 1.30 cc
When an ink tank is replaced (Ink sensor detects No Ink -> Ink Found)	Approx. 0.74 cc
When left at the cartridge replacement position for more than 20 minutes or power is turned off.	Approx. 0.74 cc
When cover is closed after being open for more than 5 seconds without carrying out any operation.	Approx. 0.74 cc
When cleaning is carried out from the printer driver or from the main unit.	Approx. 0.74 cc
When head refreshing is carried out from the printer driver.	Approx. 1.30 cc
Before printing is made on banner paper. (After more than 30 minutes have passed from the last cleaning or a pre-determined number of dots have been printed)	Approx. 0.56 cc

* The ink amount is the sum of the amounts of each color ink.

1.4 BJ Cartridge

The BJ cartridge, BC-50, used in this printer has 6 separate ink tanks, one for each of the following colors: black, cyan, magenta, yellow, photo-cyan, and photo-magenta. The head has 6 sets of 256 nozzles in 6 parallel lines. Each set of nozzles consists of 2 rows of 128 nozzles (1/600 inch apart), staggered, creating a 1/1200 inch interval between nozzles.

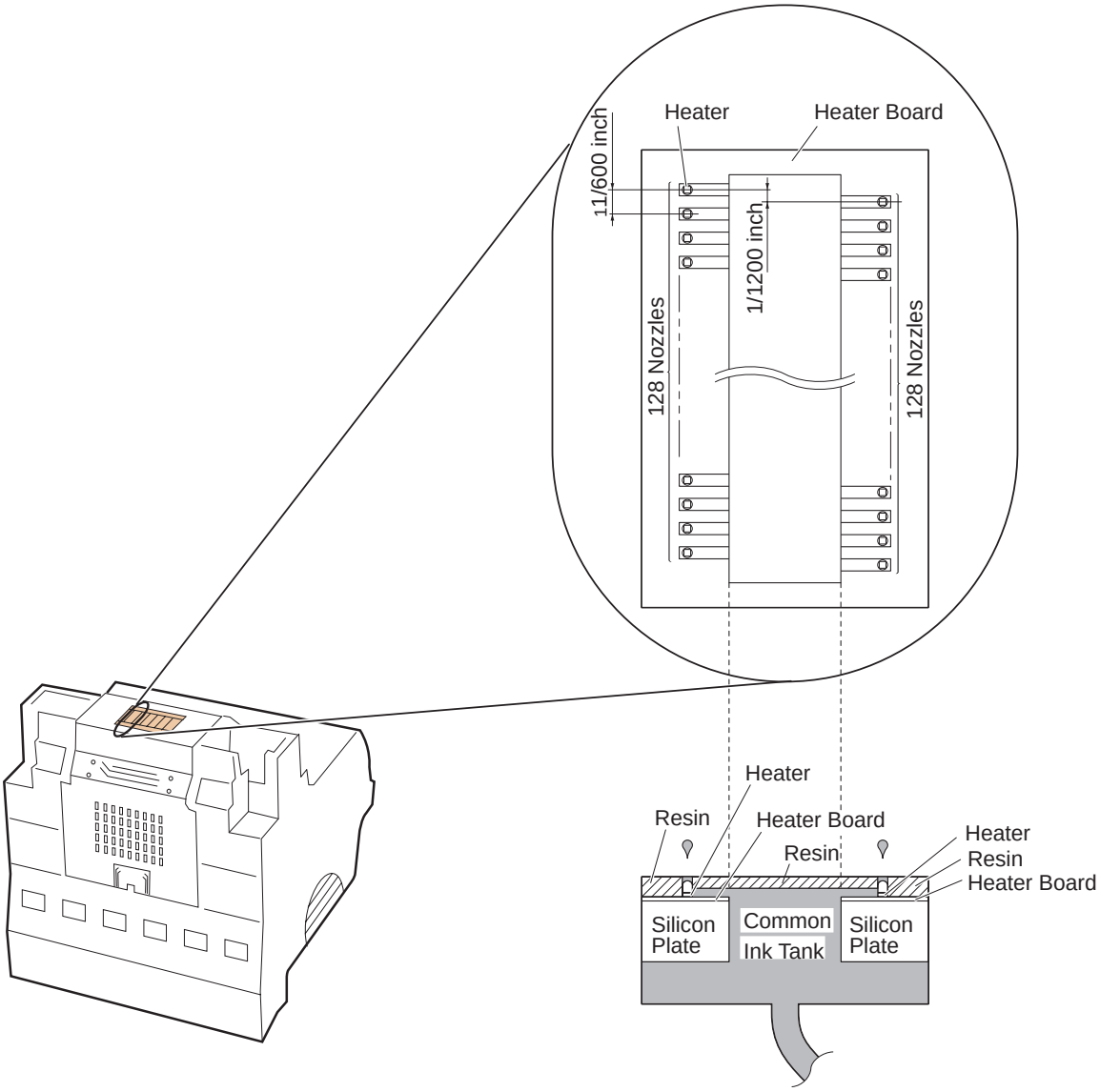

Figure 5-4 BJ Cartridge

1.5 Detection With Sensors

This printer detects conditions of the printer using the following sensors.

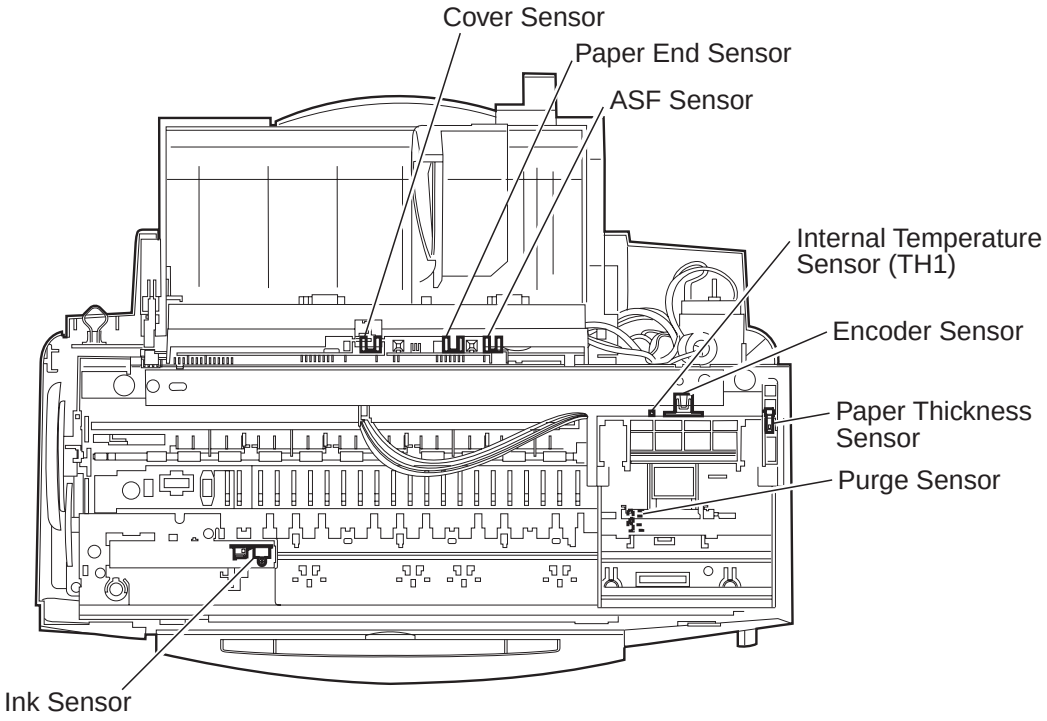

Figure 5-5 Sensor Positions

2. CONNECTOR POSITIONS AND PIN ASSIGNMENT

2.1 Logic Board

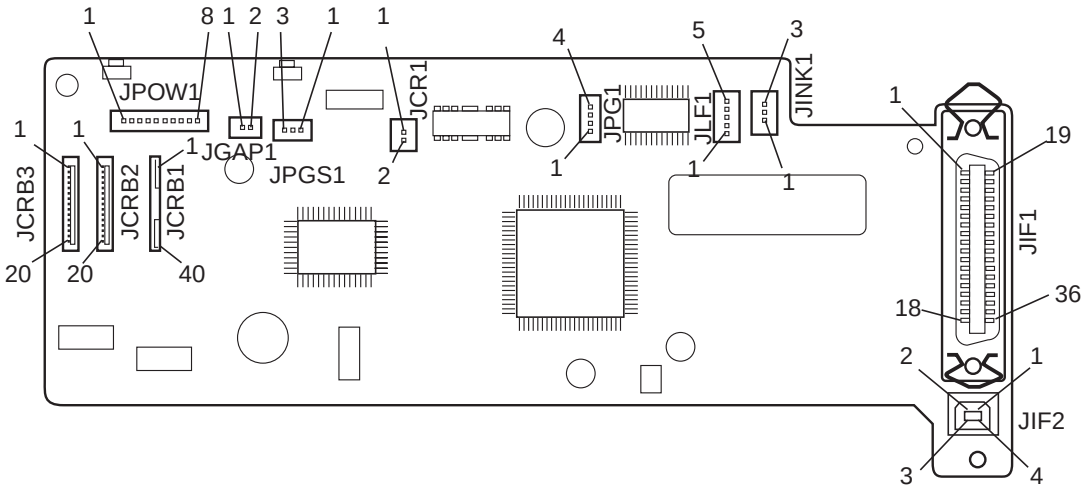

Figure 5-6 Logic Board

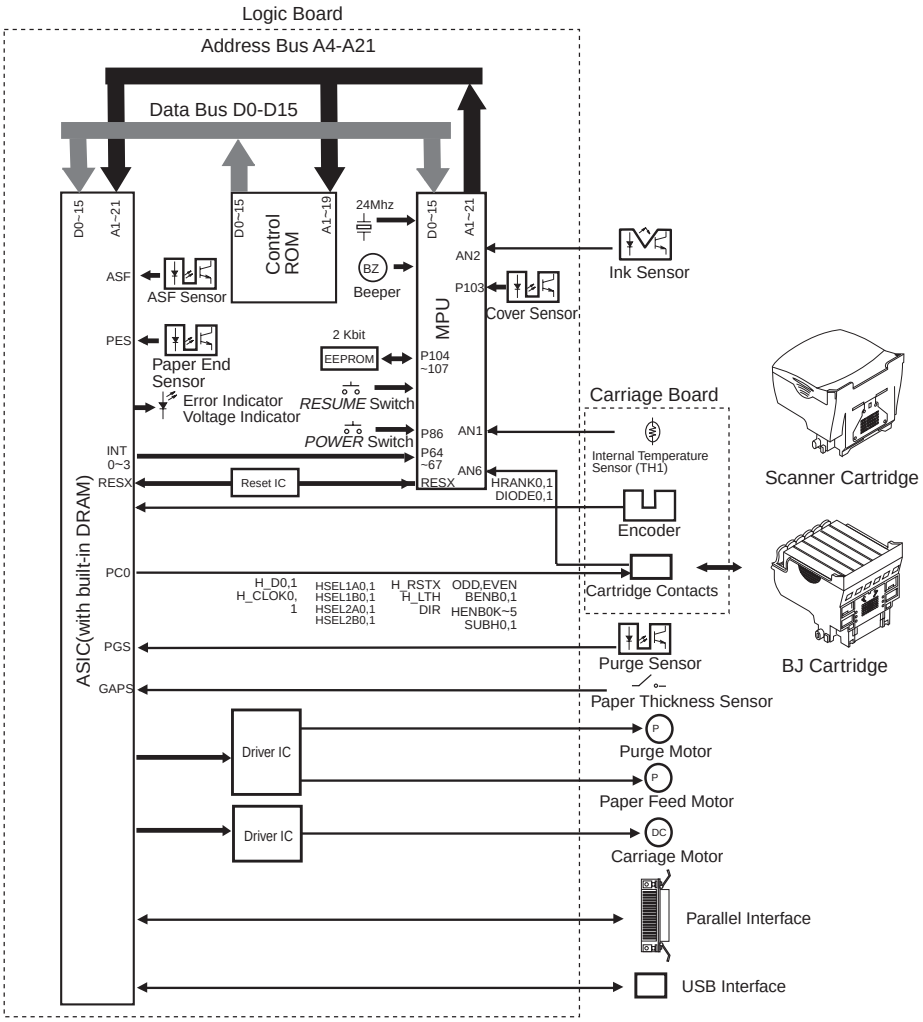

Figure 5-7 Block Diagram

JIF1 (Parallel interface connector)

Pin No.	Compatible Mode	Nibble Mode	ECP Mode
1	STROBE	HostClk	HostClk
2	DATA1	Data1	Data1
3	DATA2	Data2	Data2
4	DATA3	Data3	Data3
5	DATA4	Data4	Data4
6	DATA5	Data5	Data5
7	DATA6	Data6	Data6
8	DATA7	Data7	Data7
9	DATA8	Data8	Data8
10	ACKNLG	PrtClk	PeriphClk
11	BUSY	PrtBusy	PeriphAck
12	P.E.	AckDataReq	AckReverse
13	SELECT	Xflag	Xflag
14	AUTO FEED XT	HostBusy	HostAck
15	N.C	Undefined	Undefined
16	GND	Gnd	Gnd
17	GND	Gnd	Gnd
18	+5.0V	Vcc	Vcc
19	STROBE-RET	Signal Gnd	Signal Gnd
20	DATA1-RET	Signal Gnd	Signal Gnd
21	DATA2-RET	Signal Gnd	Signal Gnd
22	DATA3-RET	Signal Gnd	Signal Gnd
23	DATA4-RET	Signal Gnd	Signal Gnd
24	DATA5-RET	Signal Gnd	Signal Gnd
25	DATA6-RET	Signal Gnd	Signal Gnd
26	DATA7-RET	Signal Gnd	Signal Gnd
27	DATA8-RET	Signal Gnd	Signal Gnd
28	ACKNLG-RET	Signal Gnd	Signal Gnd
29	BUSY-RET	Signal Gnd	Signal Gnd
30	P.E.-RET	Signal Gnd	Signal Gnd
31	INIT	INIT	ReverseReq
32	FAULT	DataAvail	PeriphReq
33	GND	Undefined	Undefined
34	N.C	Undefined	Undefined
35	+5.0V	Undefined	Undefined
36	SELECT IN	1284Active	1284Active

JIF2 (USB interface connector)

Pin No.	Signal	IN/OUT	Function
1	PWR	IN	Cable voltage
2	D-		Data
3	D+		Data
4	GND	...	Cable GND

JPOW1 (DC power connector)

Pin No.	Signal	IN/OUT	Function
1	VH	...	+11V DC
2	GND	...	
3	VM	...	+24V DC
4	GND	...	
5	VCC	...	+5V DC
6	GND	...	
7	VHON	OUT	H:VH on, L:VH off
8	VMON	OUT	H:VM on, L:VM off

JCRB1(Carriage ribbon cable connector)

Pin No.	Signal	IN/OUT	Function
1	TOKCL	IN	Digital temperature output for KCL/Scan-in data bus 6 during scanning
2	TOMLC	IN	Digital temperature output for MLC/Scan-in data bus 7 during scanning
3	SOMLC	IN	Status output signal for MLC
4	SOMY	IN	Status output signal for MY
5	HEMY	OUT	Heat signal for MY
6	DATAM	OUT/IN	Data signal for M/Scan-in data bus 4 during scanning
7	DATAY	OUT/IN	Data signal for Y/Scan-in data bus 5 during scanning
8	TOMY	IN	Digital temperature signal for MY
10	HCLK	OUT/IN	Transfer clock signal/Transfer clock signal during scanning
9,11,13,14	GND		Logic GND
12	HEADSEN	IN	Head-detection signal
15	DATAC	OUT/IN	Data signal for C/Scan-in data bus 3 during scanning
16	DATAML	OUT/IN	Data signal for ML/Scan-in data bus 2 during scanning
17	HEMLC	OUT	Heat signal for MLC
18	HEKCL	OUT	Heat signal for KLC
19	BE1	OUT/IN	Block enable 1/Register write clock signal output during scanning
20	BE2	OUT/IN	Block enable 2/Register enable signal output during scanning
21	DATAK	OUT/IN	Data signal for K/Scan-in data bus 0 during scanning
22	BG	OUT	Data latch signal/Scan-in data read trigger during scanning
23	BE0	OUT/IN	Block enable 0/Reset signal output during scanning
24	BE3	OUT/IN	Block enable 3/Register write data signal output
25	SOKCL	IN	Status output signal for KCL
26	DATACL	OUT/IN	Data signal for CL/Scan-in data bus 1 during scanning
27	DHE	OUT	Dummy heat enable signal
28	CSCR	OUT	Head EEPROM chip select
29	EEPWD	OUT	Head EEPROM write data
30	EEPSK	OUT	Head EEPROM transfer clock
31	EEPRD	IN	Head EEPROM read data
32~35	HGND	OUT	5V for head logic operation
36	SENSEPOW	OUT	5V for encoder
37	ENCB	IN	Encoder GND
38	ENCG		Encoder phase B output
39	ENCA	IN	Encoder phase A output
40	TH	IN	Thermistor output (to obtain ambient temperature for scanner)

JCRB2, JCRB3 (Carriage ribbon cable connector)

Pin No.	Signal	IN/OUT	Function
1~10	VH		11V Power supply
11~20	GND		VH GND

JCR1 (Carriage motor connector)

Pin No.	Signal	IN/OUT	Function
1		OUT	Carriage motor +
2		OUT	Carriage motor -

JLF1 (Paper feed motor connector)

Pin No.	Signal	IN/OUT	Function
1	LFA	OUT	Paper feed motor phase A
2	LFB	OUT	Paper feed motor phase B
3	$\overline{\text{LFA}}$	OUT	Paper feed motor phase $\overline{\text{A}}$
4	$\overline{\text{LFB}}$	OUT	Paper feed motor phase $\overline{\text{B}}$

JPG1 (Purge motor connector)

Pin No.	Signal	IN/OUT	Function
1	PGA	OUT	Purge motor phase A
2	PGB	OUT	Purge motor phase B
3	$\overline{\text{PGA}}$	OUT	Purge motor phase $\overline{\text{A}}$
4	$\overline{\text{PGB}}$	OUT	Purge motor phase $\overline{\text{B}}$

JGAP1 (Paper thickness sensor connector)

Pin No.	Signal	IN/OUT	Function
1	...	...	GND
2	PGAP	...	Paper Thickness switch output

JINK1 (Ink sensor connector)

Pin No.	Signal	IN/OUT	Function
1	...	OUT	Signal to drive photo sensor in the ink sensor
2	...	...	GND
3	INKS	IN	Voltage varies according to the amount of reflected light

JPGS1 (Purge sensor connector)

Pin No.	Signal	IN/OUT	Function
1	...	OUT	Sensor drive voltage
2	...	...	GND
3	PGS	IN	Purge sensor

2.2 Carriage Board

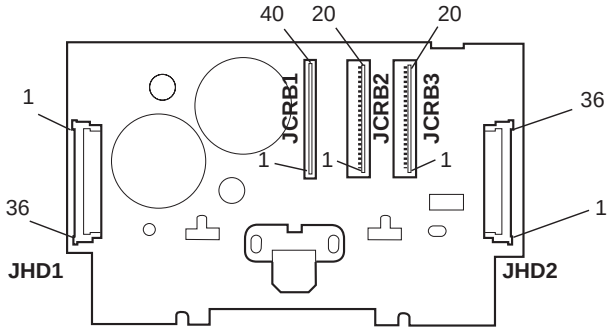

Figure 5-8 Carriage Board

JCRB1 (Carriage ribbon cable connector)

Pin No.	Signal	IN/OUT	Function
1	TH	OUT	Thermistor output (to obtain ambient temperature for scanner)
2	ENCA	OUT	Encoder phase A output
3	ENCG		Encoder GND
4	ENCB	OUT	Encoder phase B output
5	SENSEPOW	IN	5V for encoder
6~9	HGND	IN	5V to drive head logic
10	EEPRD	OUT	Head EEPROM read data
11	EEPSK	IN	Head EEPROM transfer clock
12	EEPWD	IN	Head EEPROM write data
13	CSCR	IN	Head EEPROM chip select
14	DHE	IN	Dummy heat enable signal
15	DATACL	IN/OUT	Data signal for CL/Scan-in data bus 1 during scanning
16	SOKCL	OUT	Status output signal for KCL
17	BE3	IN/OUT	Block enable 3/Register write data signal output during scanning
18	BE0	IN/OUT	Block enable 0/Reset signal output during scanning
19	BG	IN	Data latch signal/Scan-in data read trigger during scanning
20	DATAK	IN/OUT	Data signal for K/Scan-in data bus 0 during scanning
21	BE2	IN/OUT	Block enable 2/Register enable signal output during scanning
22	BE1	IN/OUT	Block enable 1/Register write clock signal output during scanning
23	HEKCL	IN	Heat signal for KCL
24	HEMLC	IN	Heat signal for MLC
25	DATAML	IN/OUT	Data signal for ML/Scan-in data bus 2 during scanning
26	DATAC	IN/OUT	Data signal for C/Scan-in data bus 3 during scanning
29	HEADSEN	OUT	Head-detection signal
27,28,30,32	GND		Logic GND
31	HCLK	IN/OUT	Transfer clock signal/Transfer clock signal during scanning
33	TOMY	OUT	Digital temperature signal for MY

34	DATAY	IN/OUT	Data signal for Y/Scan-in data bus 5 during scanning
35	DATAM	IN/OUT	Data signal for M/Scan-in data bus 4 during scanning
36	HEMY	IN	Heat signal for MY
37	SOMY	OUT	Status output signal for MY
38	SOMLC	OUT	Status output signal for MLC
39	TOMLC	OUT	Digital temperature signal for MLC/Scan-in data bus 7 during scanning
40	TOKCL	OUT	Digital temperature signal for KCL/Scan-in data bus 6 during scanning

JCRB2 and JCRB3 (Carriage ribbon cable connector)

Pin No.	Signal	IN/OUT	Function
1-10	VH		+11V power supply
11-20	GND		VH GND

JHD1 (BJ cartridge cable connector)

Pin No.	Signal	IN/OUT	Function
1	HEMLC	OUT	Heat signal for MLC
2	DATAML	IN/OUT	Data signal for ML/Scan-in data bus 2 during scanning
3	DATAC	IN/OUT	Data signal for C/Scan-in data bus 3 during scanning
4	BG	OUT	Data latch signal/Scan-in data read trigger during scanning
5	TOMY	IN	Digital temperature signal for MY
6	DATAY	IN/OUT	Data signal for Y/Scan-in data bus 5 during scanning
7	SOMLC	IN	Status output signal for MLC
8	DATAML	IN/OUT	Data signal for ML/Scan-in data bus 2 during scanning
9	BE2	IN/OUT	Block enable 2/Register enable signal output during scanning
10	HEMY	OUT	Heat signal for MY
11	SOMY	IN	Status output signal for MY
12	TOMLC	IN	Digital temperature signal for MLC/Scan-in data bus 7 during scanning
13-28	GND		VH GND
29	DHE	OUT	Dummy heat enable signal
30	EEPWD	OUT	Head EEPROM write data
31	EEPRD	IN	Head EEPROM read data
32-36	HVDD		5V to drive head logic

JHD2 (BJ cartridge cable connector)

Pin No.	Signal	IN/OUT	Function
1	DATACL	IN/OUT	Data signal for CL/Scan-in data bus 1 during scanning
2	EEPSK	OUT	Head EEPROM transfer clock
3	SOKCL	IN	Status output signal for KCL
4	CSCR	OUT	Head EEPROM chip select
5-23	VH	IN	+11V
24	TOKCL	IN	Digital temperature signal for KCL/Scan-in data bus 6 during scanning
25	DATAK	IN/OUT	Data signal for K/Scan-in data bas 0 during scanning
26	BE0	IN/OUT	Block enable 0/Resume signal output during scanning
27	BE3	IN/OUT	Block enable 3/Register write data signal output during scanning
28	HEKCL	OUT	Heat signal for KCL
29	BE1	IN/OUT	Block enable 1/Register write clock signal output during scanning
30	HEAD SEN	IN	Head-detection signal
31	HCLK	IN/OUT	Transfer clock signal/Transfer clock signal during scanning
32-36	HVDD		Logic GND

2.3 BJ Cartridge

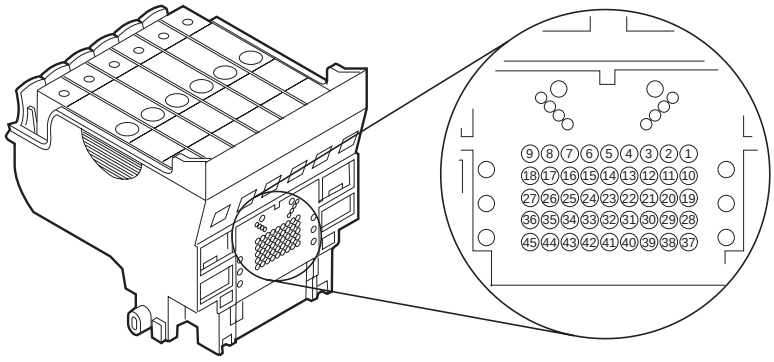

Figure 5-9 BJ Cartridge

Pin No.	Signal	IN/OUT	Function
1,2,10,11,19	HVH	...	Voltage VH to drive heater
3	CS	IN	EEPROM chip select input
4	SK	IN	EEPROM serial clock input
5,14	VDD	...	Voltage to drive logic
6	DO	OUT	EEPROM serial data output
7	DHE	IN	Dummy heat enable signal
8,9,17,18,26,27	GNDH	...	Heater drive voltage GND
12	TO1	OUT	Temperature sensor circuit output (K&CL)
13	DATAB1	IN	Shift register data input for B chip (CL)
15	DI	IN	EEPROM serial data input
16	TO2	OUT	Temperature sensor circuit output (ML&C)
20	VHT	...	Voltage to drive power transistor
21	DATAA1	IN	Shift register data input for A chip (K)
22,31,40	VSS	...	Logic drive voltage GND
23	DATAA2	IN	Shift register data input for A chip (ML)
24	VDDA	...	Temperature sensor circuit voltage
25	SO3	OUT	Fuse ROM data output (M&Y)
28	BE0	IN	Head block enable signal
29	BE3	IN	Head block enable signal
30	SO1	OUT	Fuse ROM data output (K&CL)
32	VSSA	...	Temperature sensor circuit voltage GND
33	SO2	OUT	Fuse ROM data output (ML&C)
34	DATAA3	IN	Shift register data input for A chip (M)
35	HE3	IN	Heat enable signal (M&Y)
36	BE2	IN	Head block enable signal
37	BE1	IN	Head block enable signal
38	HE1	IN	Heat enable signal (K&CL)
39	CLK	IN	Shift register clock signal input
41	HE2	IN	Heat enable signal (ML&C)
42	DATAB2	IN	Shift register data input for B chip (C)
43	BG	IN	Shift register data latch signal input
44	DATAB3	IN	Shift register data input for B chip (Y)
45	TO3	OUT	Temperature sensor circuit output (M&Y)

2.4 Scanner Cartridge

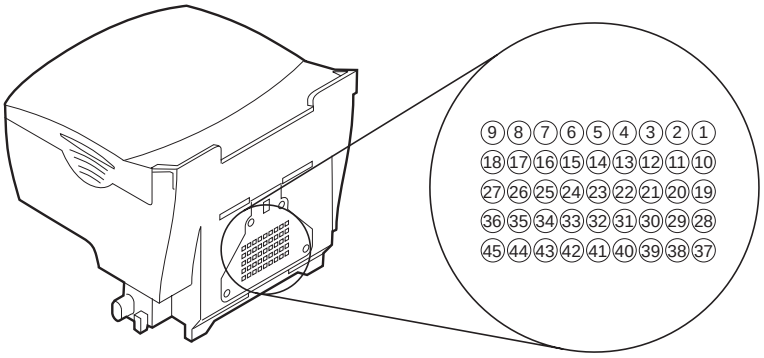

Figure 5-10 Scanner Cartridge

Pin No.	Signal	IN/OUT	Function
1,2,10,11,19,20	VHLED	...	+11V for LED
3,4	N.C.	...	Not used
5,14,24	VDD	...	+5V
6,7	N.C.	...	Not used
8,9,17,18,26,27	GNDLED	...	GND
12	DT6	OUT	Scan-in image data output signal
13	DT4	OUT	Scan-in image data output signal
15	N.C.	...	Not used
16	DT7	OUT	Scan-in image data output signal
21	DT0	OUT	Scan-in image data output signal
22,31,32,40	VSS	...	GND
23	DT5	OUT	Scan-in image data output signal
25	SID3	OUT	Fuse ROM data output
28	RST	IN	Resume
29	RDT	IN	Internal register setting data
30	SID1	OUT	Fuse ROM data output
33	SID2	OUT	Fuse ROM data output
34	DT2	OUT	Scan-in image data output signal
35	N.C.	...	Not used
36	REN	IN	Enable signal for setting internal register
37	RWR	IN	Write clock for setting internal register
38	N.C.	...	Not used
39	DTCK	OUT	Scan-in image serial data clock
41	N.C.	...	Not used
42	DT1	OUT	Scan-in image data output signal
43	LNST	IN	Scanning start signal (1 line scan)
44	DT3	OUT	Scan-in image data output signal
45	N.C.	...	Not used

2.5 AC Adapter

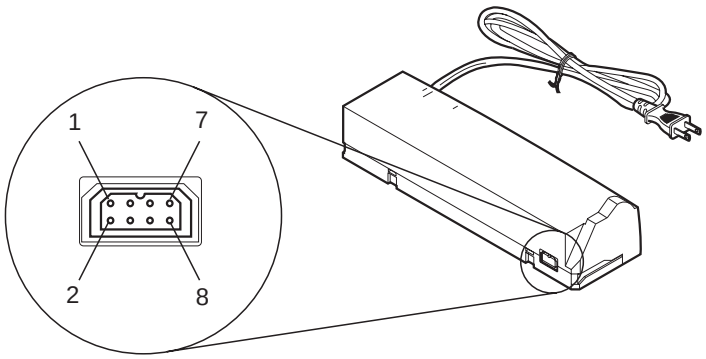

Figure 5-11 AC Adapter

Pin No.	Signal	IN/OUT	Function
1	VH	...	+11V DC
2	GND	...	
3	VM	...+24V DC	
4	GND	...	
5	VCC	...	+5V
6	GND	...	
7	VHON	IN	H:VH on, L:VH off
8	VMON	IN	H:VM on, L:VM off

2.6 DC Power Cable

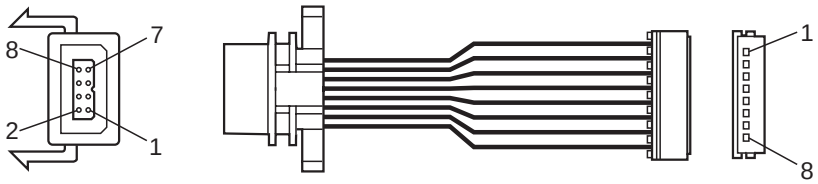

Figure 5-12 DC Power Cable

Pin No.	Signal	IN/OUT	Function
1	VH	...	+11V DC
2	GND	...	
3	VM	...	+24V DC
4	GND	...	
5	VCC	...	+5V DC
6	GND	...	
7	VHON	IN	H:VH on, L:VH off
8	VMON	IN	H:VM on, L:VM off

2.7 Carriage Motor

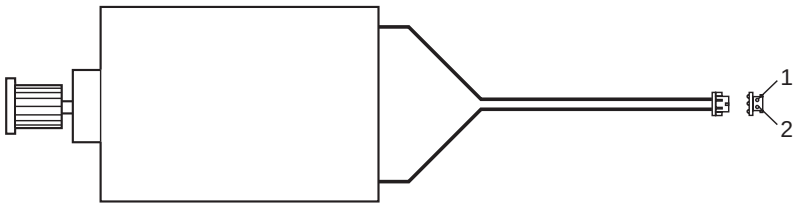

Figure 5-13 Carriage Motor

Pin No.	Signal	IN/OUT	Function
1			Carriage motor +
2			Carriage motor -

2.8 Paper Feed Motor

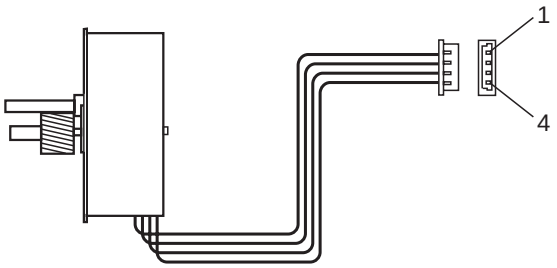

Figure 5-14 Paper Feed Motor

Pin No.	Signal	IN/OUT	Function
1	LFA	IN	Paper feed motor phase A
2	LFB	IN	Paper feed motor phase B
3	$\overline{\text{LFA}}$	IN	Paper feed motor phase $\overline{\text{A}}$
4	$\overline{\text{LFB}}$	IN	Paper feed motor phase $\overline{\text{B}}$

2.9 Purge Motor

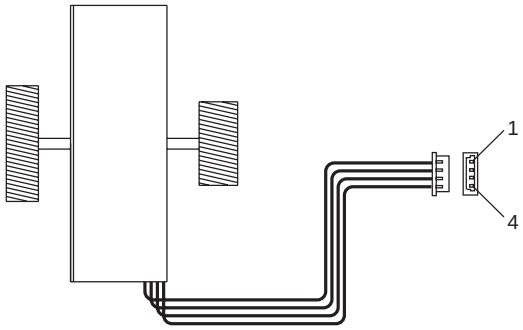

Figure 5-15 Purge Motor

Pin No.	Signal	IN/OUT	Function
1	PGA	IN	Purge motor phase A
2	PGB	IN	Purge motor phase B
3	$\overline{\text{PGA}}$	IN	Purge motor phase $\overline{\text{A}}$
4	$\overline{\text{PGB}}$	IN	Purge motor phase $\overline{\text{B}}$

2.10 Ink Sensor

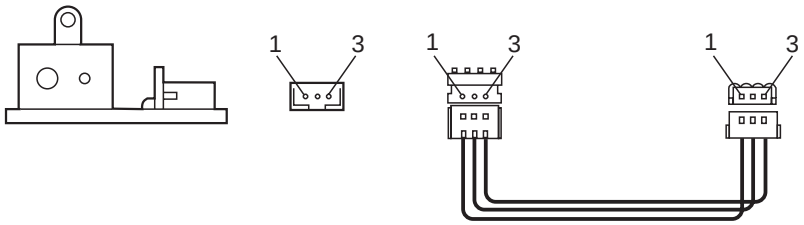

Figure 5-16 Ink Sensor

Pin No.	Signal	IN/OUT	Function
1	...	IN	Signal to drive photo LED in ink sensor
2	...	...	GND
3	INKS	OUT	Voltage that varies according to the amount of reflected light

2.11 Paper Thickness Sensor

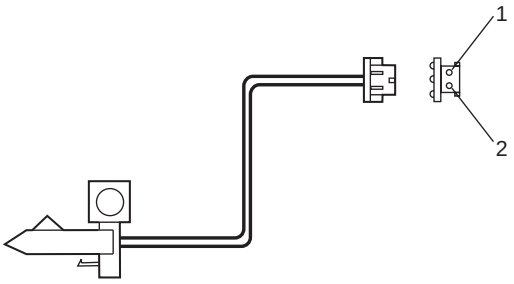

Figure 5-17 Paper Thickness Sensor

Pin No.	Signal	IN/OUT	Function
1	...	...	GND
2	PGAP	...	Head gap switch output

2.12 Purge Sensor

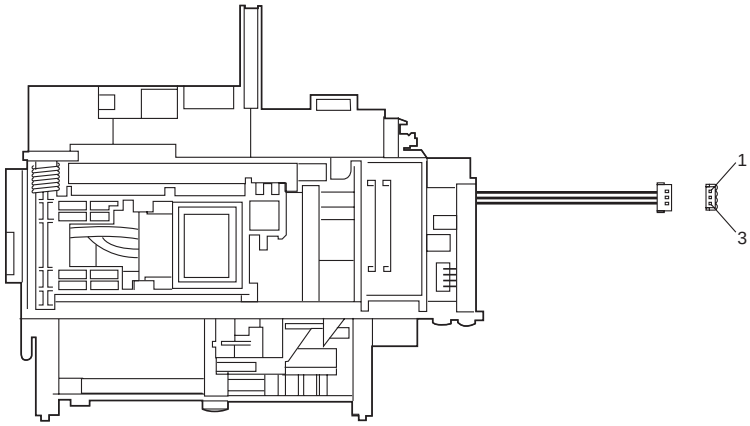

Figure 5-18 Purge Sensor

Pin No.	Signal	IN/OUT	Function
1	...	IN	Sensor drive voltage
2	...	...	GND
3	PGS	OUT	Purge sensor output

3. CIRCUIT DIAGRAM

3.1 Parts Layout

3.1.1 Logic board

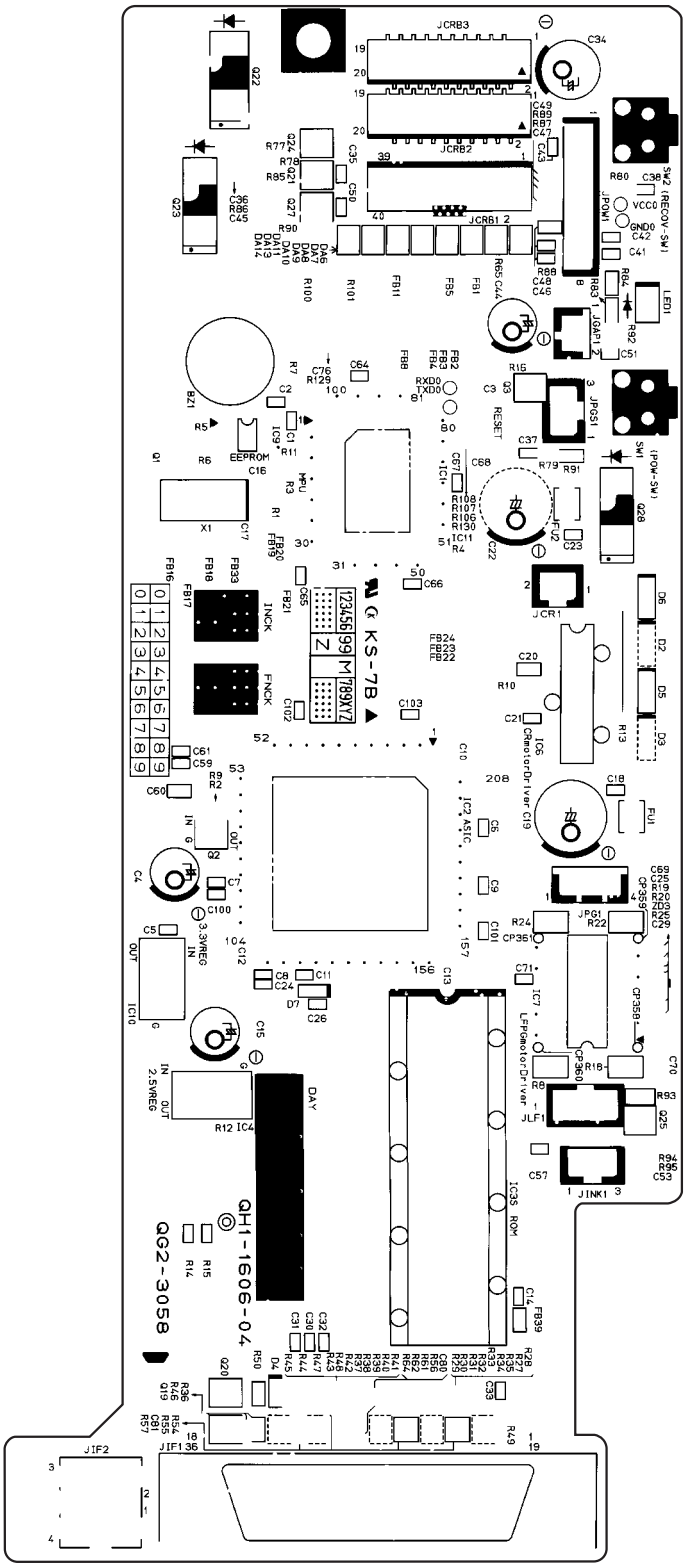

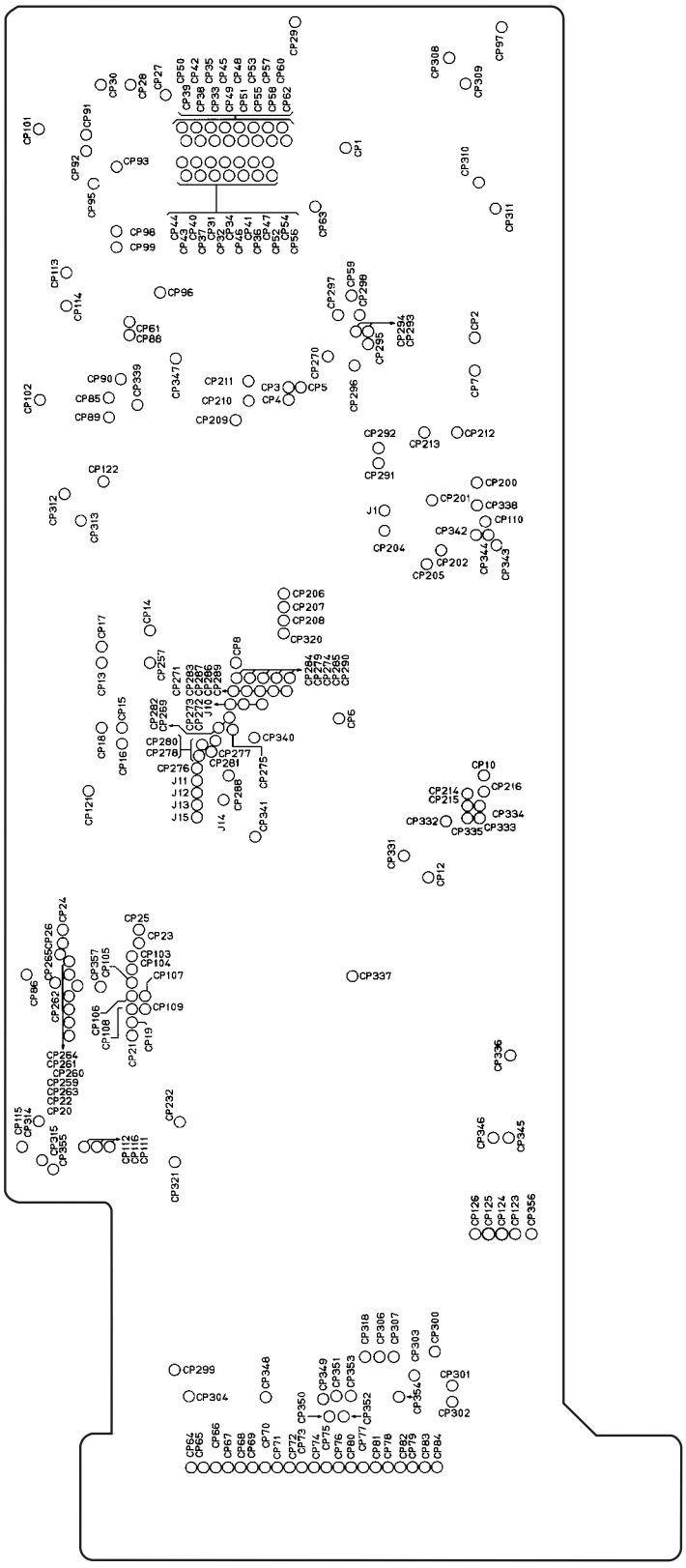

Figure 5-20 Logic Board (Bottom View)

3.1.2 Carriage board

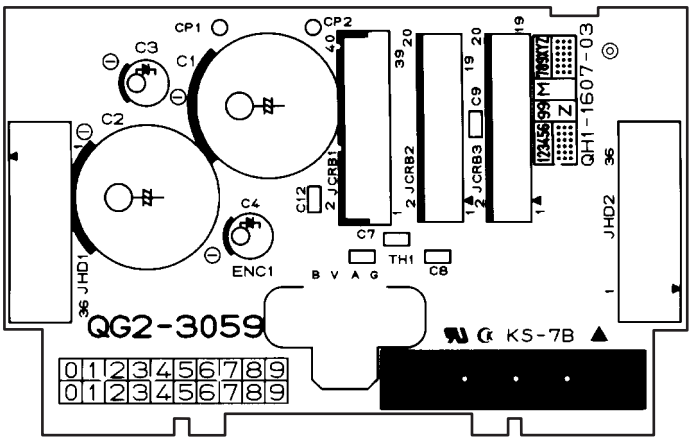

Figure 5-21 Carriage Board

3.2 Circuit Diagrams

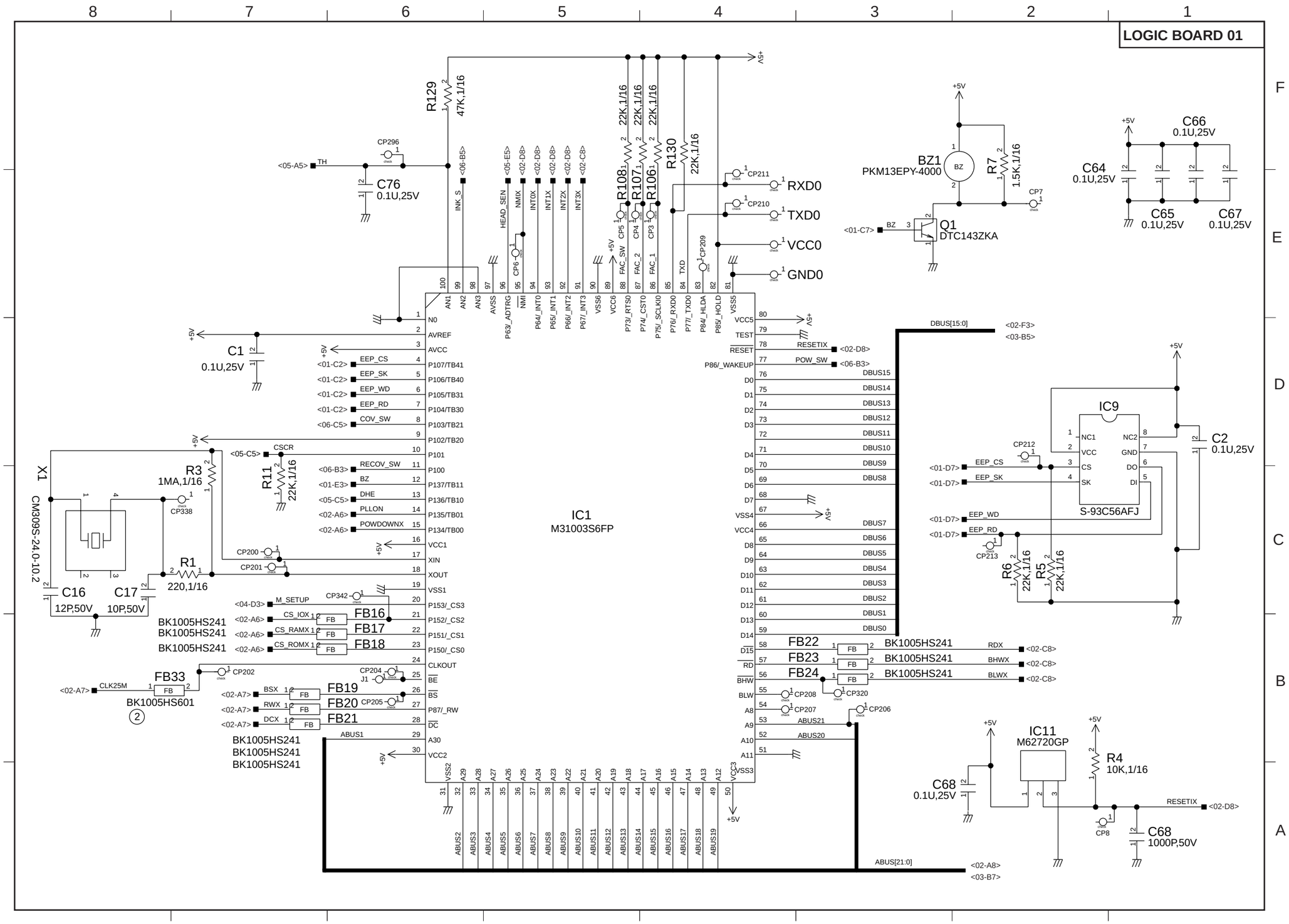

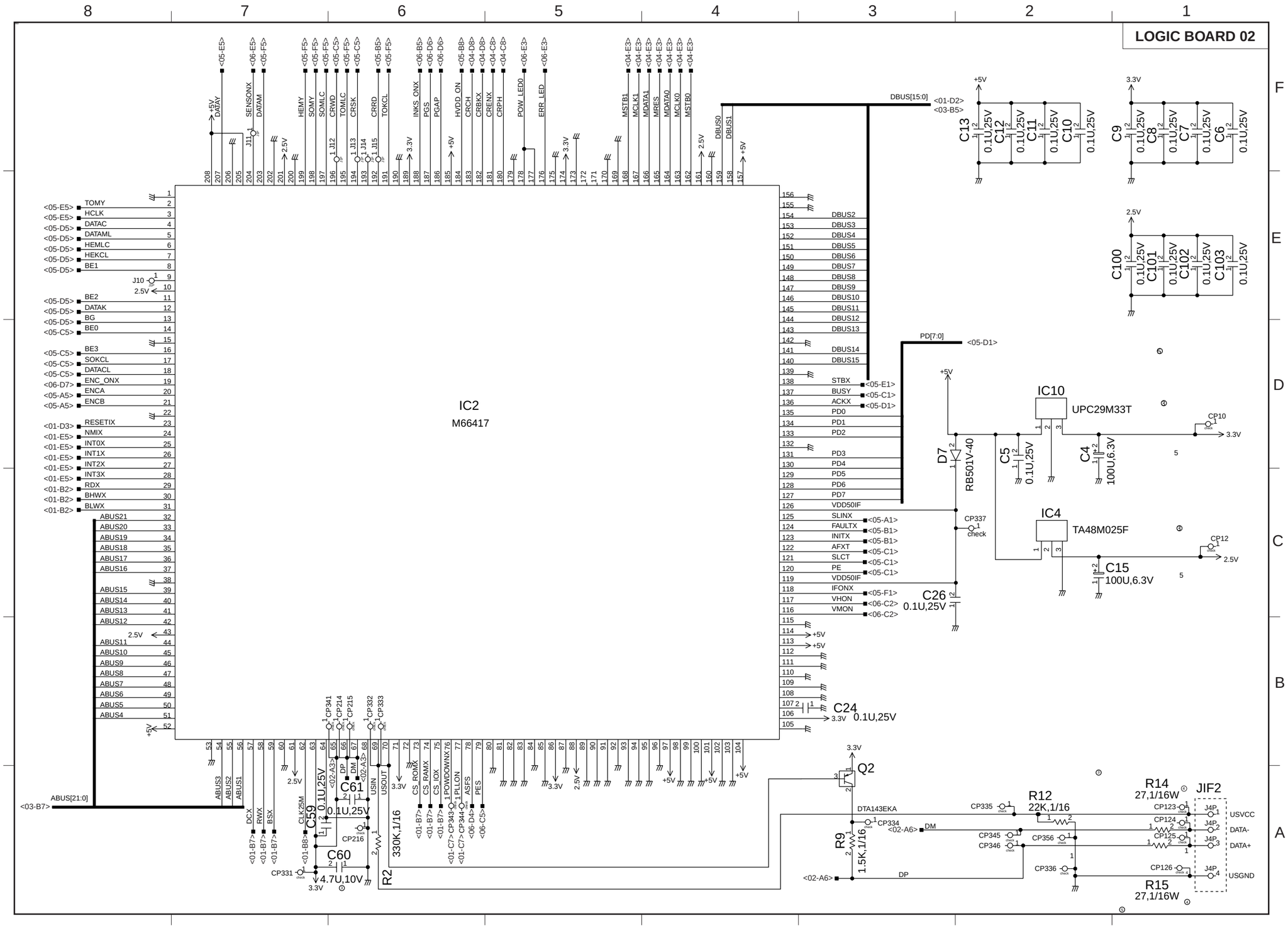
LOGIC BOARD 02
IC2
M66417
IC10
UPC29M33T
IC4
TA48M025F
Q2
DTA143EKA
D7
RB501V-40
JIF2
DBUS[15:0]
PD[7:0]
ABUS[21:0]
USVCC
DATA-
DATA+
USGND

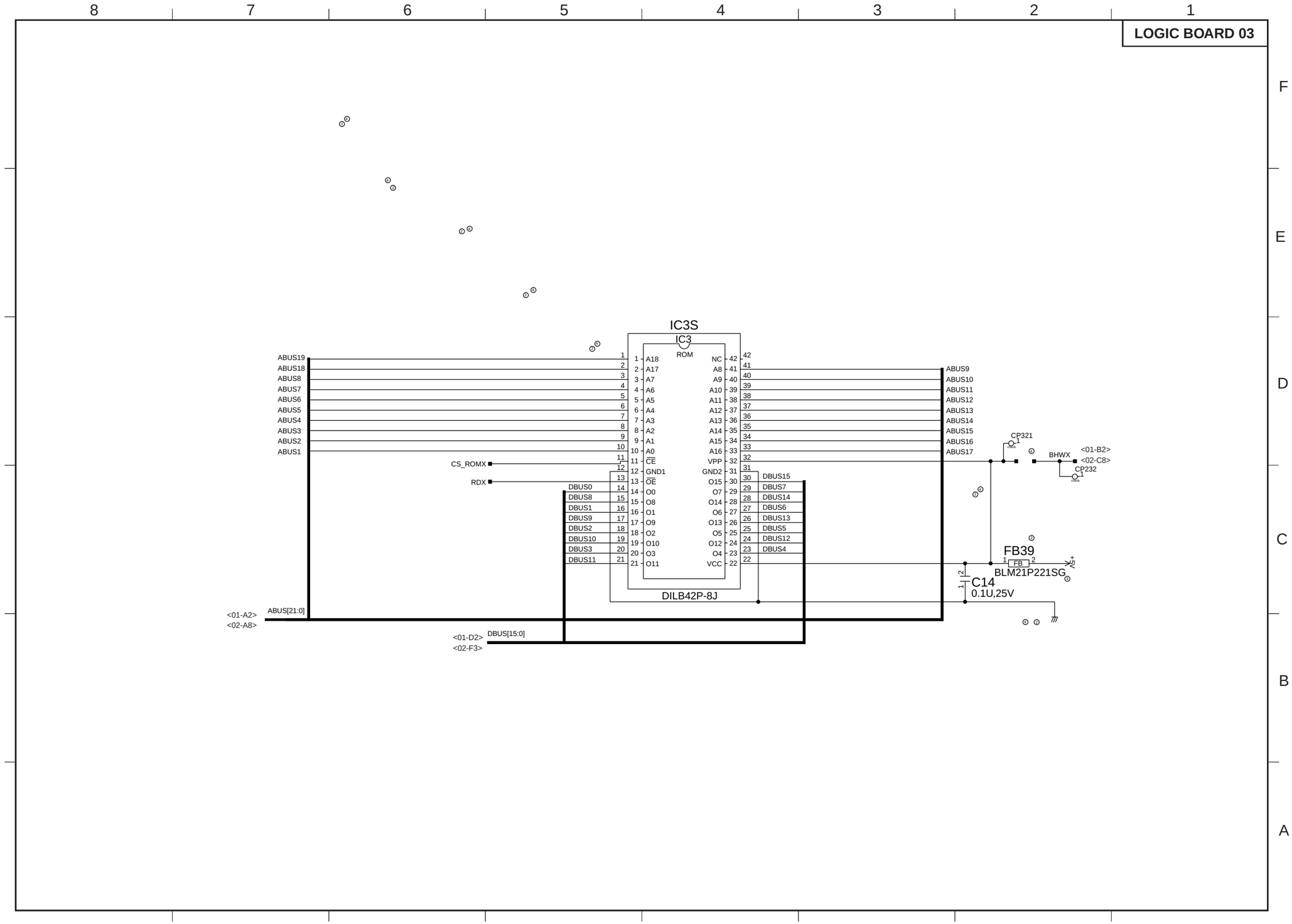
LOGIC BOARD 03
8
7
6
5
4
3
2
1
F
E
D
C
B
A
IC3S
IC3
ROM
ABUS19
ABUS18
ABUS8
ABUS7
ABUS6
ABUS5
ABUS4
ABUS3
ABUS2
ABUS1
CS_ROMX
RDX
A18
A17
A7
A6
A5
A4
A3
A2
A1
A0
CE
GND1
OE
O0
O8
O1
O9
O2
O10
O3
O11
NC
A8
A9
A10
A11
A12
A13
A14
A15
A16
VPP
GND2
O15
O7
O14
O6
O13
O5
O12
O4
VCC
DBUS0
DBUS8
DBUS1
DBUS9
DBUS2
DBUS10
DBUS3
DBUS11
DBUS15
DBUS7
DBUS14
DBUS6
DBUS13
DBUS5
DBUS12
DBUS4
ABUS9
ABUS10
ABUS11
ABUS12
ABUS13
ABUS14
ABUS15
ABUS16
ABUS17
DILB42P-8J
CP321
BHWX
<01-B2>
<02-C8>
CP232
FB39
FB
BLM21P221SG
+5V
C14
0.1U,25V
<01-A2>
<02-A8>
ABUS[21:0]
<01-D2>
<02-F3>
DBUS[15:0]

LOGIC BOARD 04

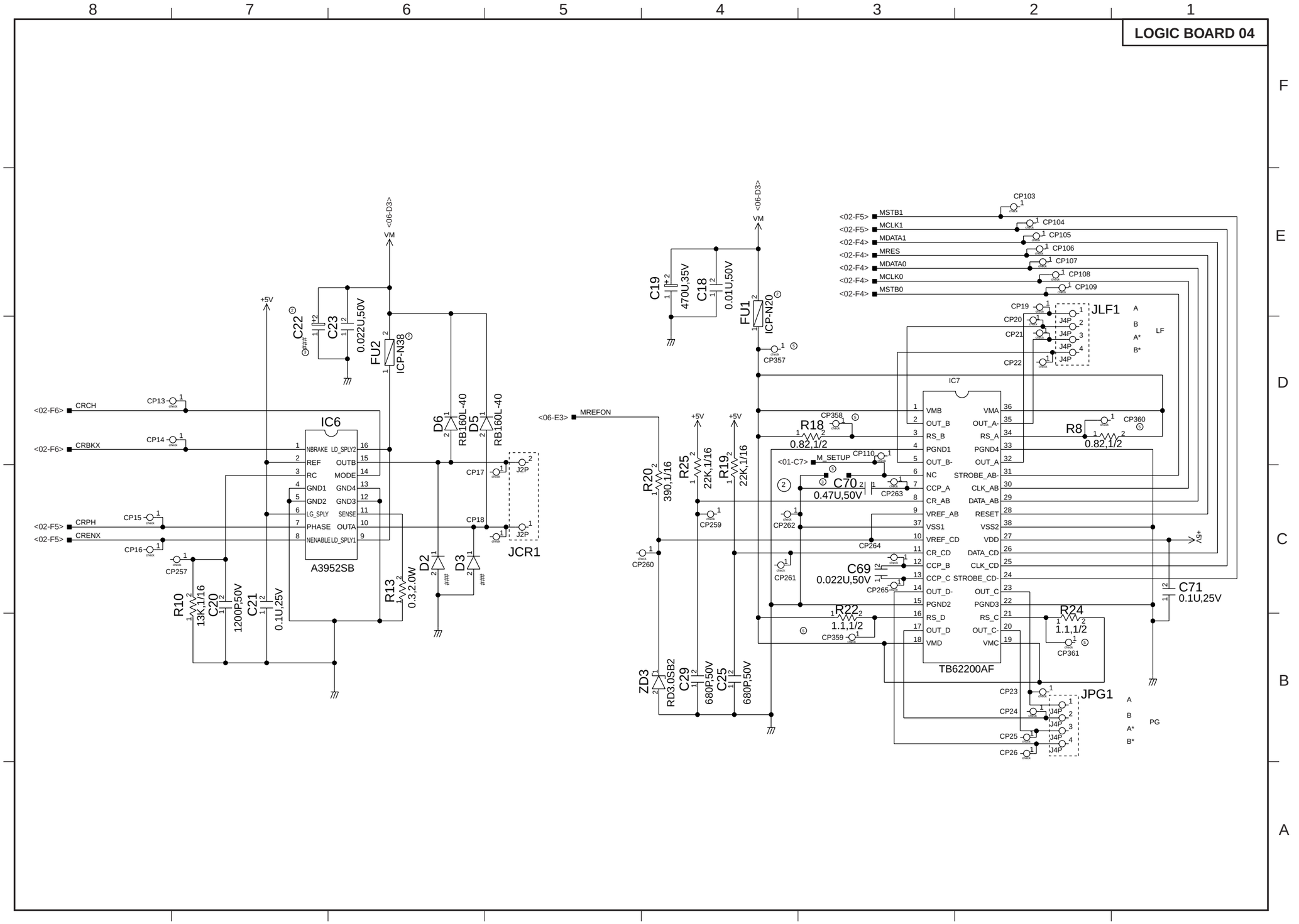

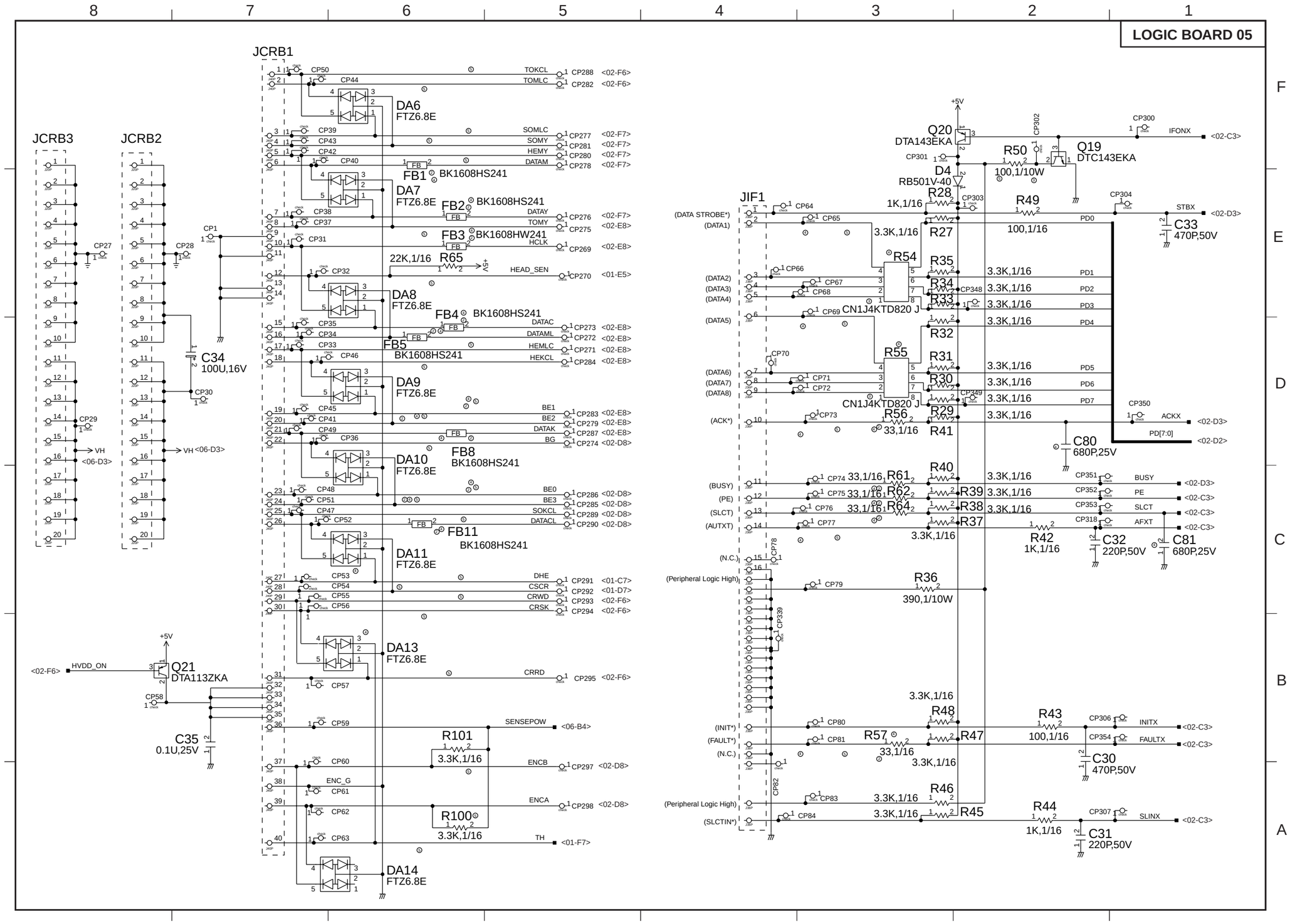
LOGIC BOARD 05
JCRB1
JCRB2
JCRB3
JIF1
DA6 FTZ6.8E
DA7 FTZ6.8E
DA8 FTZ6.8E
DA9 FTZ6.8E
DA10 FTZ6.8E
DA11 FTZ6.8E
DA13 FTZ6.8E
DA14 FTZ6.8E
FB1 BK1608HS241
FB2 BK1608HS241
FB3 BK1608HW241
FB4 BK1608HS241
FB5 BK1608HS241
FB8 BK1608HS241
FB11 BK1608HS241
R65 22K,1/16
R101 3.3K,1/16
R100 3.3K,1/16
C34 100U,16V
C35 0.1U,25V
Q21 DTA113ZKA
Q20 DTA143EKA
Q19 DTC143EKA
D4 RB501V-40
R50 100,1/10W
R49 100,1/16
R28 1K,1/16
R27 3.3K,1/16
R54 CN1J4KTD820 J
R55 CN1J4KTD820 J
R56 33,1/16
R61 33,1/16
R62 33,1/16
R64 33,1/16
R36 390,1/10W
R42 1K,1/16
R43 100,1/16
R44 1K,1/16
R45 3.3K,1/16
R46 3.3K,1/16
R47 3.3K,1/16
R48 3.3K,1/16
R57 33,1/16
C33 470P,50V
C80 680P,25V
C32 220P,50V
C81 680P,25V
C30 470P,50V
C31 220P,50V
IFONX
STBX
ACKX
PD[7:0]
BUSY
PE
SLCT
AFXT
INITX
FAULTX
SLINX
HVDD_ON
SENSEPOW
ENCB
ENCA
TH
(DATA STROBE*)
(DATA1)
(DATA2)
(DATA3)
(DATA4)
(DATA5)
(DATA6)
(DATA7)
(DATA8)
(ACK*)
(BUSY)
(PE)
(SLCT)
(AUTXT)
(N.C.)
(Peripheral Logic High)
(INIT*)
(FAULT*)
(SLCTIN*)

LOGIC BOARD 06

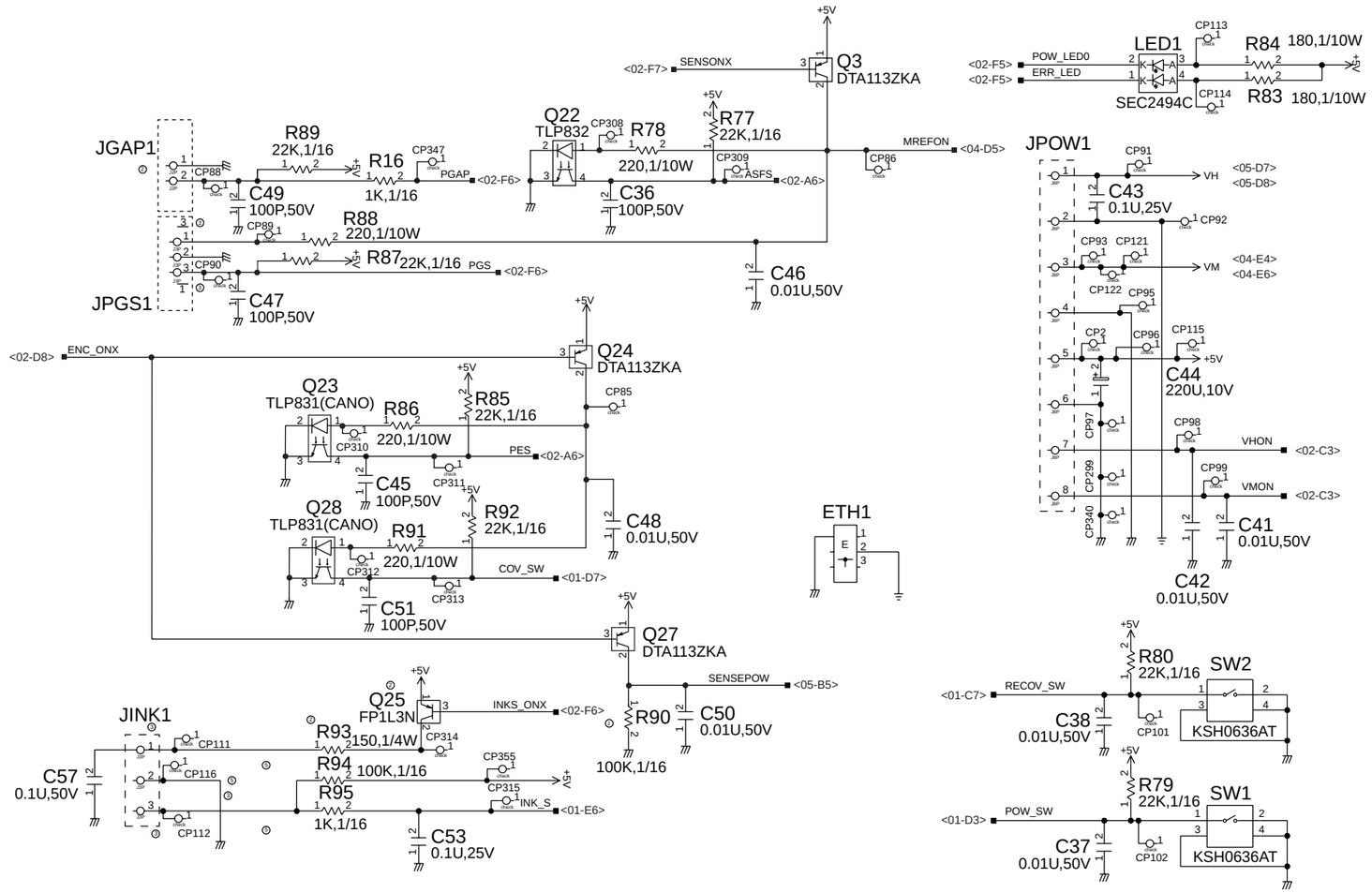

CARRIAGE BOARD 01

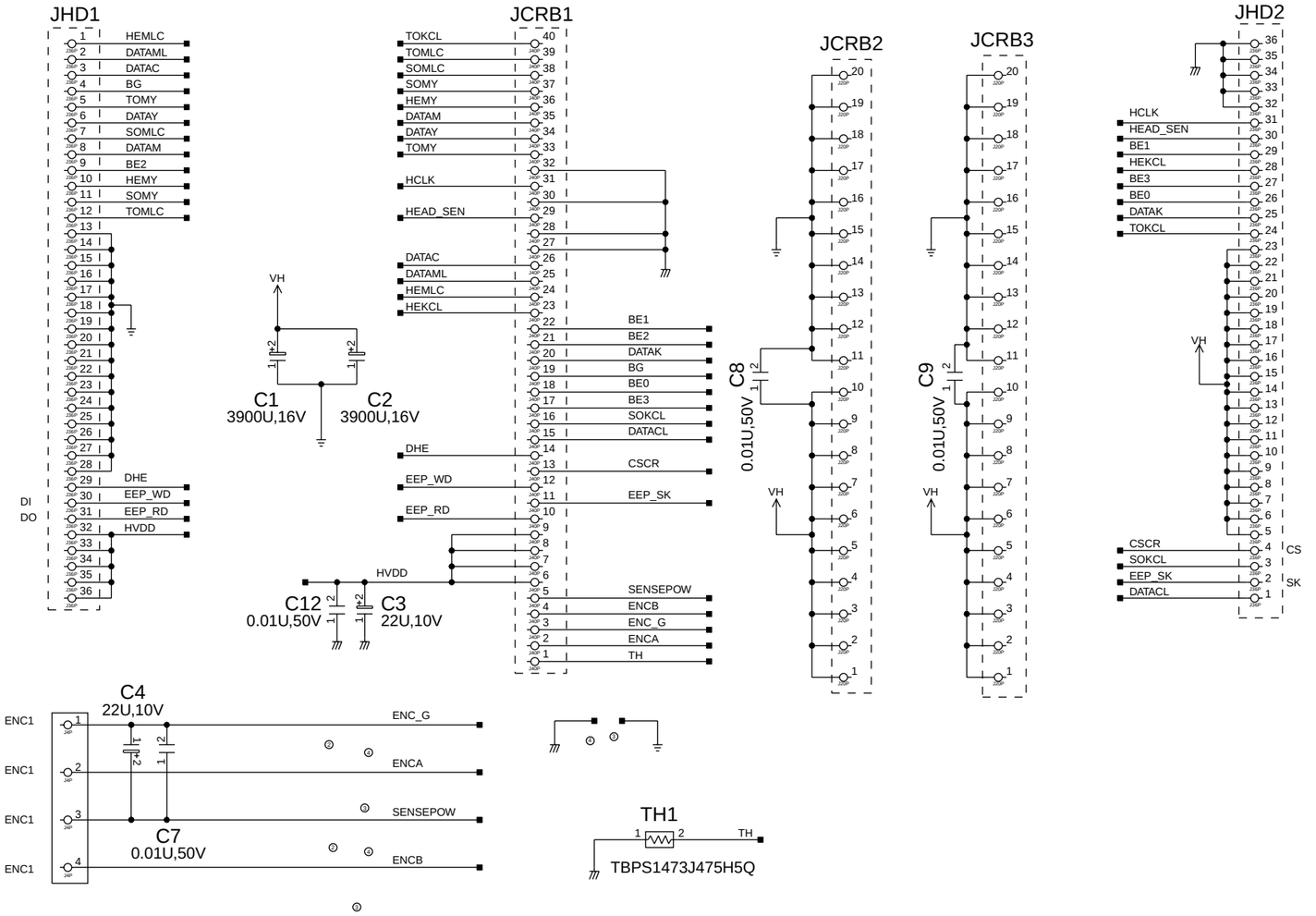

This document is printed
on 100% recycled paper.

Canon

PRINTED IN JAPAN (IMPRIME AU JAPON)

CANON INC.